BARDIANI VALVOLE

Instruction, Use and Maintenance Manual

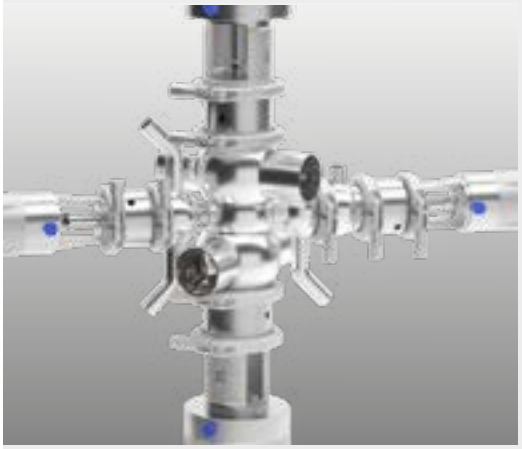

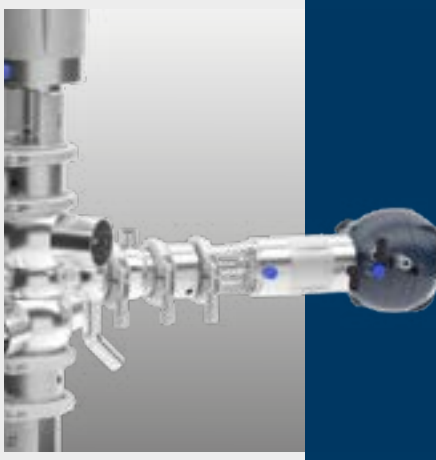

PNEUMATIC VALVE WITH DIAPHRAGM

BZZYP - BZZYT

Bardiani Valvole S.p.A.
via G. di Vittorio, 50/52 - 43045 Fornovo di Taro (PR) - Italy
tel. +39 0525 400044 - fax +39 0525 3408
bardiani@bardiani.com - www.bardiani.com

(Translation of the original instructions)

EN-IST-BZZYP-0726

INDEX

INTRODUCTION 4

1 Safety, Warning and Mandatory Signs 5

1.1 Operator training 8

2 Safety 9

2.1 General safety warnings 9

2.2 Electrical components 9

3 Technical data 10

4 Checking / Unpacking / Lifting 11

5 Installation 13

6 Operation 16

6.1 Work steps 17

7 Troubleshooting 21

8 Cleaning 22

9 Disposal 23

10 Maintenance 24

10.1 General maintenance 24

10.2 Scheduled maintenance 25

10.3 Tools useful for Disassembly/Reassembly 26

10.4 Aseptic valve BZZYP 27

10.5 Aseptic valve BZZYT 28

10.6 Pneumatic Valves BBZP - BBYP - BBYT 29

10.7 BBZP - BBYP - BBYT disassembly 31

10.8 BBZP - BBYP - BBYT assembly 39

10.9 Pneumatic Valves BBZP - BBZT- BBYP Diverter 50

10.10 BBZP - BBZT - BBYP Diverter disassembly 52

10.11 BBZP - BBZT - BBYP diverter assembly 58

10.12 Pneumatic valves BBZT 67

10.13 BBZT disassembly 69

10.14 BBZT- BBWT1 assembly 73

11 Annexes 81

15 BBWT1 2D diagram 82

16 BBZP Diverter 2D diagram 83

17	BBYP 2D diagram	84
18	BBYT 2D diagram	85
19	BBYT 2D diagram diverter	86
20	Warranty	87
21	Recommendations	88

MANUAL REVISION	DATE

INTRODUCTION

This "Instruction, Use and Maintenance Manual" has been drawn up expressly for expert technical personnel. Consequently any information which can easily be deducted from reading the text and/or examining the illustrations and/or drawings provided herein shall not be the object of further explanation.

This "Instruction, Use and Maintenance Manual" forms an integral part of the valve. Before proceeding with installation, use or maintenance of each type of valve it is compulsory to read and understand this manual.

This manual must be kept for all future reference

When using valves in compliance with Directive 2014/34/EU (ATEX) it is mandatory to consult a specific manual.

It being understood that the essential characteristics of the valve type described herein shall remain the same, the manufacturer reserves the right to amend and/or integrate and/or update the data and/or information relative to use of the valve provided in the "Instruction, Use and Maintenance Manual", at any time and without prior notice.

The latest, updated version of the "Instruction, Use and Maintenance Manual" is always available at www.bardiani.com

The manufacturer shall not in any way be held liable for any consequences resulting from a failure to correctly observe the prescriptions provided in the relative manual concerning installation, use, maintenance and care of the product.

All rights reserved. It is prohibited, without prior written authorization from the manufacturer, to totally and/or partially reproduce and/or transmission and/or record any part of this "Instruction, Use and Maintenance Manual" using any means and/or support, including IT and/or electronic and/or mechanical and/or paper formats, or by means of any other system to save and/or reuse it for purposes different to the exclusive use by the purchaser.

1 Safety, Warning and Mandatory Signs

WARNING SIGNS		
Pictogram	Description	Notes
	WARNING **General**	This tells the person in question that the operation described involves (when not performed in accordance with the relative safety regulations) the risk of personal injury.
	WARNING **Hand crushing**	Exercise caution in executing the procedure Hand crushing hazard Never touch moving parts if the actuator is supplied with compressed air.
	WARNING **Heavy loads**	Exercise caution in executing the procedure Heavy suspended loads.
	WARNING **Severe burns**	Heat emission hazard Very hot surface, risk of severe burns
	WARNING **Risk of explosions**	Take Care, risk of explosions

OBLIGATION SIGNS (FOR THE OPERATOR IN CHARGE OF MECHANICAL MAINTENANCE AND ASSEMBLY/DISASSEMBLY)		
Pictogram	Description	Notes
	OBLIGATION General	Special instructions must be followed to avoid injury to persons.
	PROTECTIVE GLOVES	Protective gloves must be available for handling objects which could cause hand injuries or when there is the possibility of coming into contact with harmful substances.
	HARD HAT	Hard hats must be available when lifting heavy parts.
	FOOTWEAR	Use safety footwear to protect against injuries caused by falling objects during maintenance operations (particularly when dismantling parts).
	SUITABLE CLOTHING	Suitable clothing such as overalls. It is strictly prohibited to wear clothes with large flapping sleeves and/or other loose items which could easily get caught up in machine parts.
	SAFETY GLASSES	Protective glasses must be available when there is the possibility of contact which harmful substances which could cause eye injuries.

OPERATING SIGNS		
Pictogram	Description	Notes
	SKILLED PERSONNEL	Dismantling/Assembling and maintenance operations must be carried out by expert technicians only.
	NOTE	Follow the indicated note with care
	ENVIRONMENTAL NOTE	Follow the regulations in force in the country of used governing waste disposal.
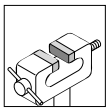	**CLAMP**	Use of a clamp
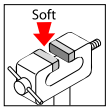	**CLAMP WITH SOFT JAWS**	Use of a clamp with jaws made from soft material

OPERATING SIGNS		
Pictogram	Description	Notes
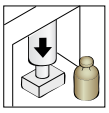	**PRESS**	Use of a press
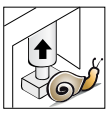	**PRESS (release)**	Use of a press Gradual release of the pressure force
	ELECTRICAL CONNECTION	Electrical connection to the control unit (consult the relative instruction manual).
	ELECTRICAL DISCONNECTION	Electrical disconnection from the control unit (consult the relative instruction manual).
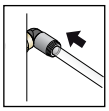	**PNEUMATIC CONNECTION**	Connection of the air to the valve.
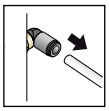	**PNEUMATIC DISCONNECTION**	Disconnection of the air from the valve
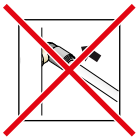	**DO NOT CONNECT AIR**	Do not connect compressed air
	APPLICATION OF FOODSAFE GREASE	Use CIP-FILM grease or equivalent
	APPLICATION OF FOODSAFE GREASE	Use FOODLUBE Multi-paste grease or equivalent
	APPLICATION OF MULTIPURPOSE FOODSAFE GREASE	Use AGIP GREASE MU EP 2 SE grease or equivalent
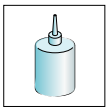	**THREADLOCK APPLICATION**	Use SPEED BOND threadlock or similar
	SEQUENCE OF OPERATIONS	Sequence of assembly and disassembly operations
	OPTIONAL	

1.1 Operator training

All persons who have to work on the valve must be qualified to carry out the relative maintenance tasks.
They must be informed as to the possible hazards involved and must observe all the safety instructions set out in this manual.
Allow expert personnel only to work on the electrical components.

2 Safety

2.1 General safety warnings

Intended use
Bardiani valves are intended exclusively for the handling of fluids and powders.

Prohibited use
The valve must not be used:
- for any operations different to those described under the heading "Intended Use",
- for moving fluids different to those envisaged by the manufacturer and indicated in the valve's technical data.
- for moving fluids at different pressures to those envisaged by the manufacturer and indicated in the valve's technical data.

Limitations on valve use
It is forbidden to:
- use the valve in a construction configuration different to the one envisaged by the manufacturer.
- use the valve where there is a risk of explosion and/or fire, unless envisaged by the manufacturer (if the valves are certified in accordance with Directive 2014/34/EU, please refer to the ATEX Manual)-;
- integrate other systems and/or equipment which were not considered by the manufacturer during the executive design phase,
- use the valve for purposes other than those specifically envisaged by the manufacturer.

WARNING
The machine may not he used inside premises where there is a potentially explosive atmosphere or risk of fire unless otherwise stated by the manufacturer (in the case of valves certified in accordance with Directive 2014/34/EU please refer to the ATEX Manual).

BARDIANI VALVOLE S.p.A. declines all liability for any installation, use or maintenance which fails to comply with the indications provided in this manual!

2.2 Electrical components

(see the control unit manual)

3 Technical data

VALVE DATA	
Maximum pressure (PN)	PN10
Maximum seal pressure	See catalogue
Storage temperature	from -10°C to 25°C
Material in contact with the product	AISI 316L (1.4404). Check the resistance to corrosion in relation to products and detergents
Gasket material in contact with the product	EPDM, FKM, HNBR, P.T.F.E. and other gaskets on request. Check compatibility with products and detergents
Surface finish in contact with the product	Ra 0.8 µm. Other finishes available on request

VAPOUR BARRIER DATA	
Ports	1/8" BSPP
Steam maximum temperature	130°C (266°F)
Gasket material	FKM

PNEUMATIC ACTUATOR DATA	
Ports	1/8" BSPP
Pipe dimensions	6 mm external diameter, 4 mm internal diameter
Air pressure	from 6 bar (87 psi) to 8 bar (116 psi)
Air quality	Class 2, 4, 3 ISO8573-1
External material	AISI 304L (1.4307)
Seals	NBR
Noise levels	76 dB
Electrical power supply	See Giotto Top

GASKET MATERIALS COMPATIBILITY			
Product	EPDM	FKM	HNBR
Temperature (applications with air)	From -10 to 140°C	From -10 to 200°C	From -10 to 130°C
Caustic soda 2%	60°C	30°C	To be checked
Nitric Acid 2%	60°C	80°C	To be checked
Saturated steam 125°C	Suitable	To be checked	Suitable
Greases	Unsuitable	Suitable	Suitable
Alcohols	Suitable	Unsuitable	Suitable

The valve is in conformity with PED 2014/68/EU, with special reference to Annex III, Form A, concerning internal manufacturing checks as indicated in the Conformity Assessment Procedures.

The valves with DN equal or lower than DN25 are not included in compliance with Article 4, paragraph 3.

Valves designed for use with gas, liquid gas, gases dissolved under pressure, steam and those liquids with a vapour pressure at maximum admissible temperature exceeding 0.5 bar at normal atmospheric pressure (1.013 mbar) are included within the following limits:
- The valves with DN ranging from 32 to 100 (included) with Group 1 fluids;
- The valves with DN equal or higher than DN125 with Group 2 fluids.

The end user must carry out noise assessment testing once the valve has been installed in the plant.
In the event of any doubt, please contact Bardiani Valvole S.p.A.

4 Checking / Unpacking / Lifting

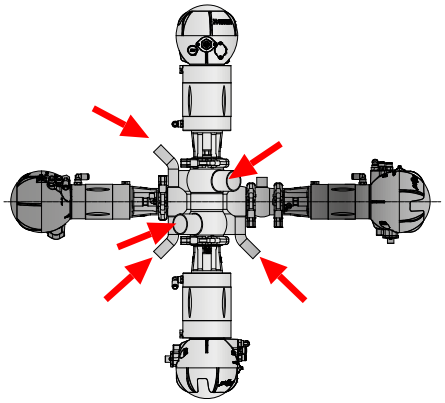

1. CHECK:
- Check the valve show no signs of damage caused during transport and that it corresponds with the order;
- Check the inside of the valve.

2. UNPACKING:
The valve packaging is made up of cardboard and wood.
The valve is mainly made up of metal materials. The gaskets are usually made from elastomers. Disposal must be in compliance with local legislation.

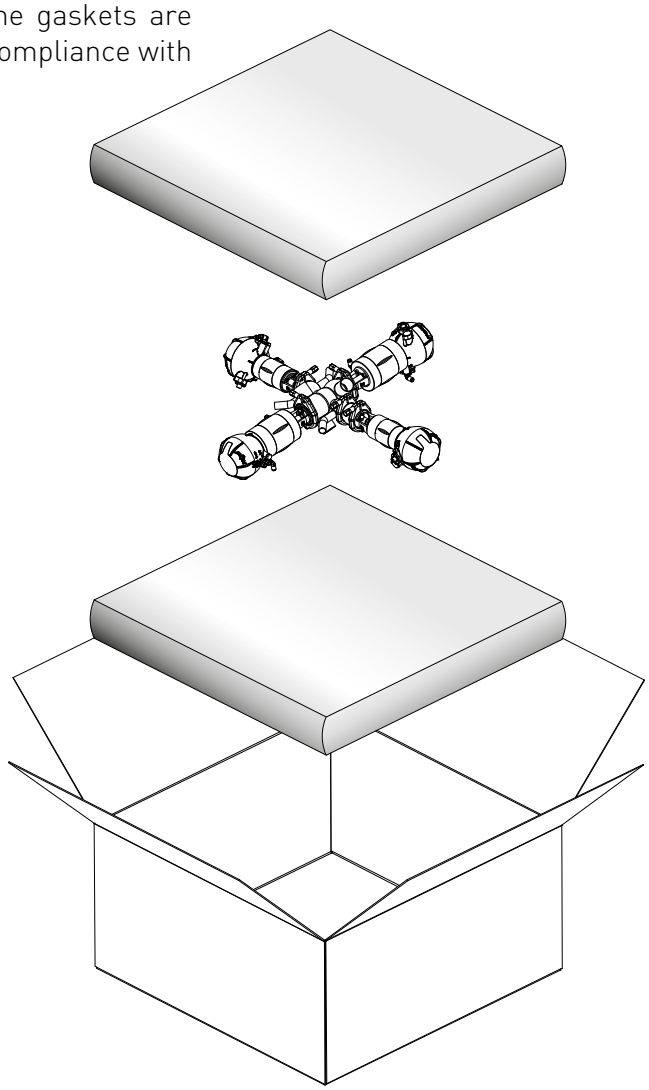

3. VALVE LIFTING:

Take care as to the type of valve you are handling. Based on the size there are different lifting procedures.

WARNING!

Before lifting the valve, make sure there are no disassembled or separate valve parts which could fall off causing injury to persons and damage to the valve.

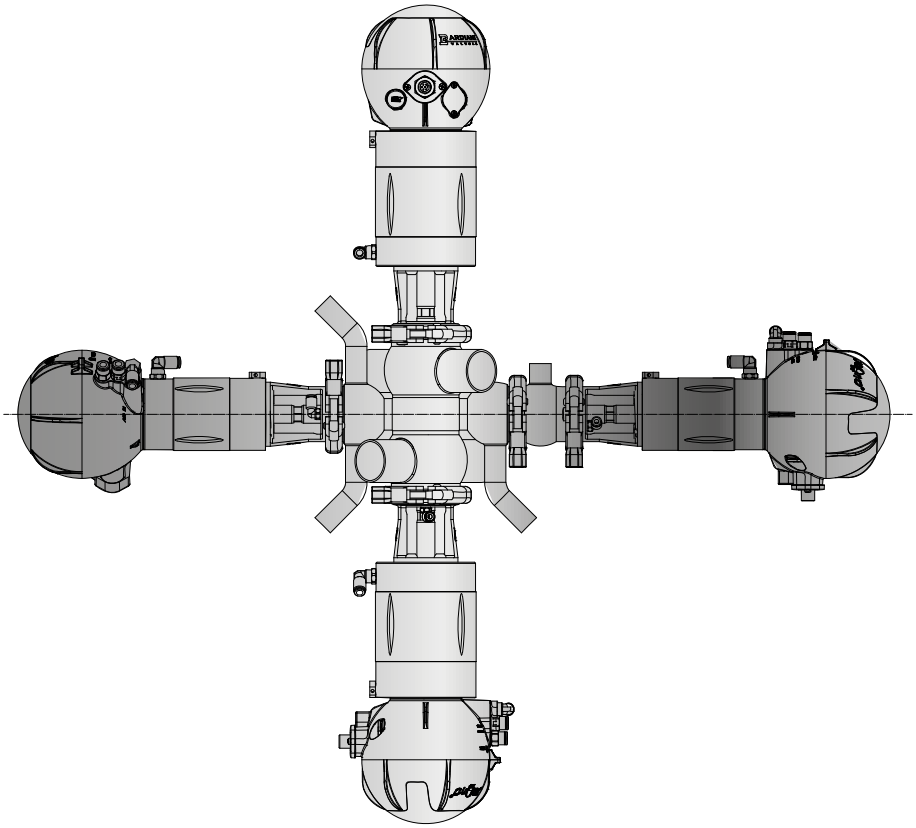

WARNING!

The figures above are used purely to represent the methods and procedures for hoisting the valves. Handle the equipment in compliance with the applicable legislation in force in the country of use. Bardiani Valvole S.p.A. declines all liability for any damage to things and/or injuries to persons caused by improper and/or incorrect hoisting of the valve.

5 Installation

1. ELECTRICAL AND PNEUMATIC ENERGY SUPPLY

- Use expert personnel for installation/uninstallation operations;
- Check that the air pressure and quality are correct (see "Technical Data");
- Check the power supply to the control unit is correct (consult the relative instruction manual).

A = Valve member advance
B = Valve member retreat
C = Check control unit manual
In single acting valves there is only one of the aforementioned commands.

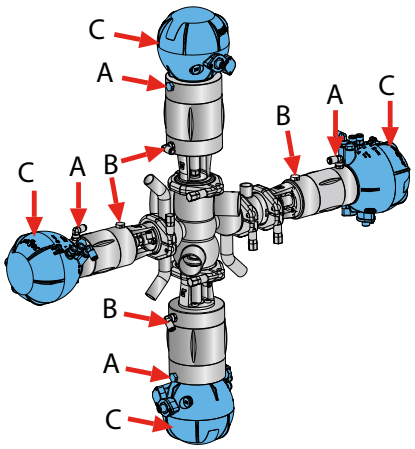

2. REDUCING THE STRESS TO WHICH THE VALVE IS SUBJECTED:

- Vibrations;
- Thermal expansion of the piping;
- Excessive welding;
- Overload.

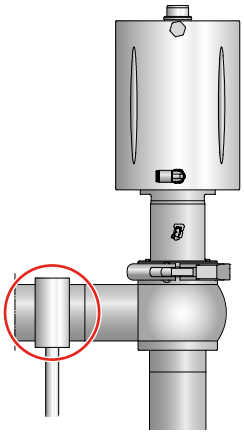

WARNING!
The seal seats may become deformed or cause valve malfunctioning.

WARNING!
Bardiani Valvole S.p.A. declines all liability for any damage to things and/or injuries to persons caused by any failure to correctly follow the installation procedures.

4. VALVE CONNECTIONS/CONNECTORS:
If the valve is fitted with connectors, you may proceed with installation. Correctly insert the gaskets and tighten the connectors.

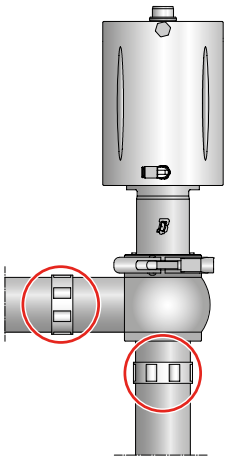

5. WELDING THE VALVE BODY ONTO PIPING:
Remove the body from the rest of the valve before proceeding with welding operations. Please refer to the following pages in this manual.

WARNING!
Hand crushing hazard. During operation there is a risk of crushing inside the valve body in the area between the actuator and the valve body.

6. MINIMUM MAINTENANCE CLEARANCES:

Make sure there is enough room around the valve for it to be disassembled (with the control unit installed).

DIN				
Valve dimension (DN)	A (mm)	B (mm)	C (mm)	D (mm)
40	41x1.5	19x1.5	875	830
50	53x1.5	19x1.5	924	1215
65	70x2	19x1.5	807	1210
80	85x2	19x1.5	820	1009

SS ASME-BPE				
DN	A (mm)	B (mm)	C (mm)	D (mm)
1"1/2	38.1X1.65	19X1.5	875	830
2"	50.8X1.65	19X1.5	924	1215
2"1/2	63.5X1.65	19X1.5	807	1210
3"	76.2X1.65	19X1.5	820	1009

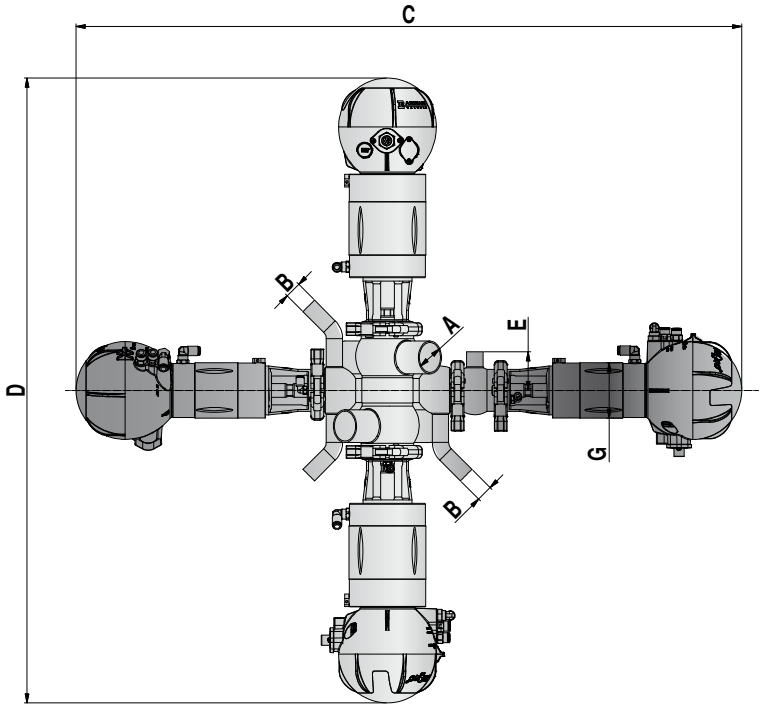

WARNING!

Bardiani Valvole S.p.A. declines all liability for any damage to things and/or injuries to persons caused by any failure to correctly follow the installation procedures.

6 Operation

1. VALVE INSPECTION BEFORE OPERATION:

- Supply air to the actuator;
- Power the valve (via the control unit);
- Open and close the valve several times;
- Check that the valve works correctly and accurately.

A = Valve member advance
B = Valve member retreat
In single acting valves there is only one of the aforementioned commands.
C = Check control unit manual

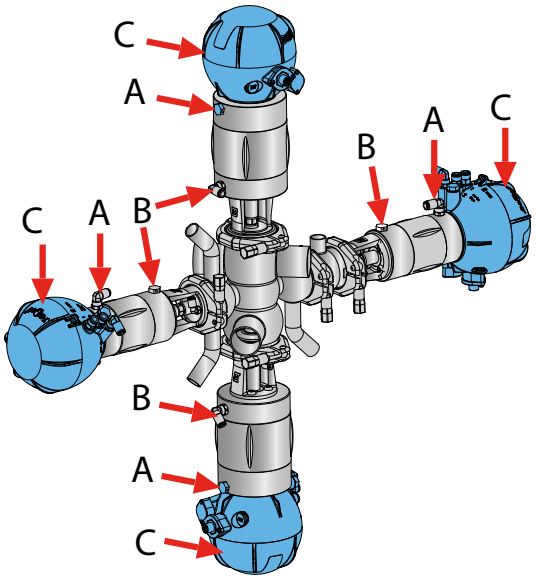

WARNING!
Hand crushing hazard. During operation there is a risk of crushing inside the valve body in the area between the actuator and the valve body.

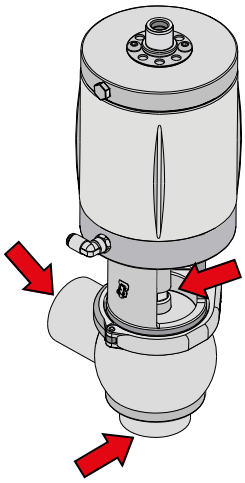

2. LEAK DETECTOR CONNECTOR (UNITS WITH DIAPHRAGM VALVES ONLY):
Leak detector connector (item 286), located on top of the valve body inside the assembly, to signal possible rupture of the diaphragm (item 128): if the diaphragm ruptures, the liquid will be discharged from the connector.

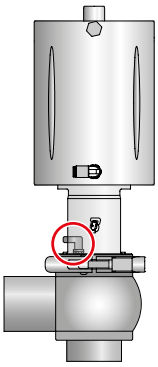

6.1 Work steps

Step 1
Leakage chamber sterilization before production
(auxiliary valves open, main valves closed)

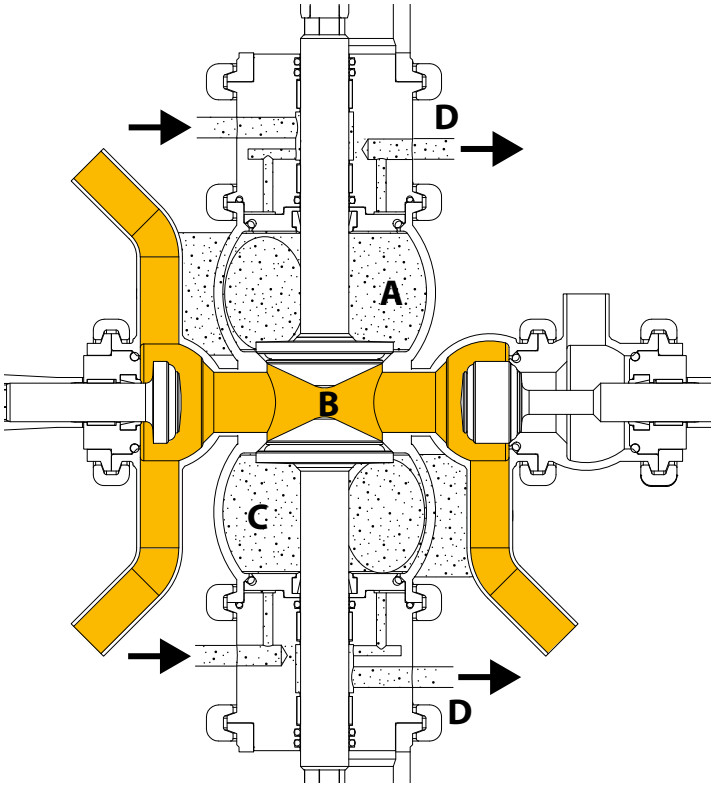

A: Product
B: Steam
C: Steam
D: Steam

Step 1A
Lift the upper valve to sterilize the upper shutter seat
(auxiliary valves open, lower valve closed)

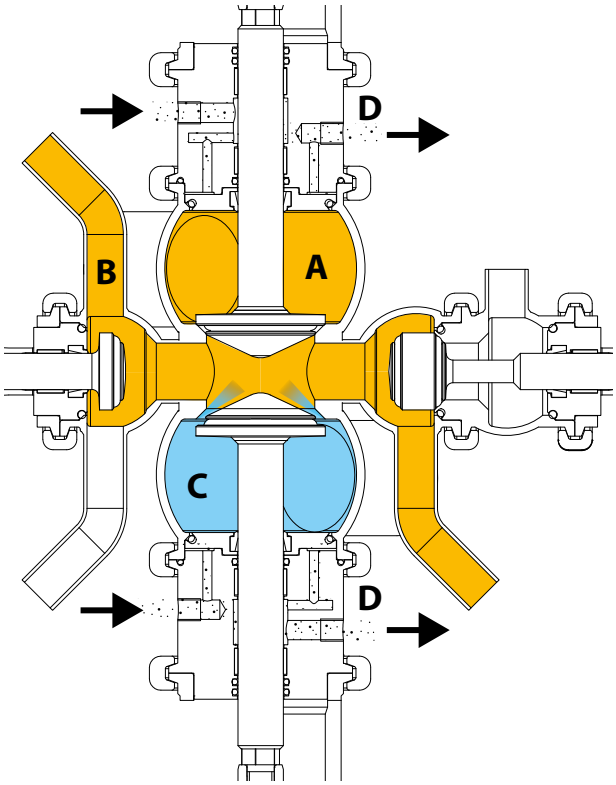

A: Product
B: Steam
C: Steam
D: Steam

Step 1b
Lower valve lift to sterilize lower shutter seat
(auxiliary valves open, upper valve closed)

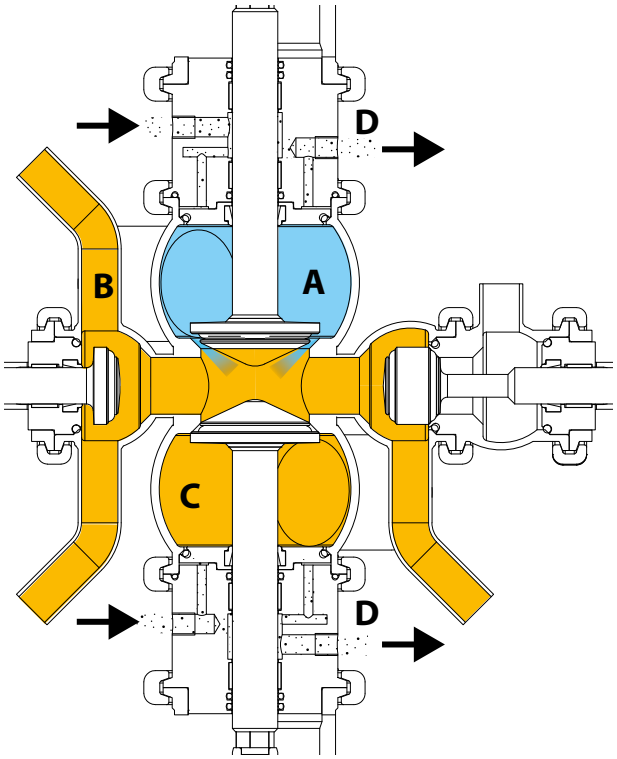

A: Water at 135°C
B: Steam
C: Steam
D: Steam

Step 2
Valves open,
(auxiliary valves closed but steam flow is maintained behind the shutter to avoid contamination)

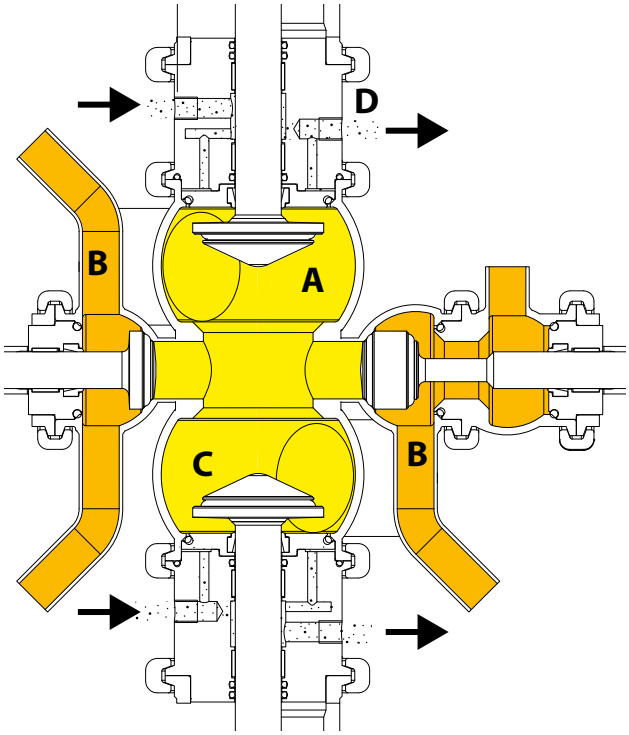

A: Product
B: Steam
C: Product
D: Steam

Step 3
Valves open,
(auxiliary valves closed but steam flow is maintained behind the shutter to avoid contamination)

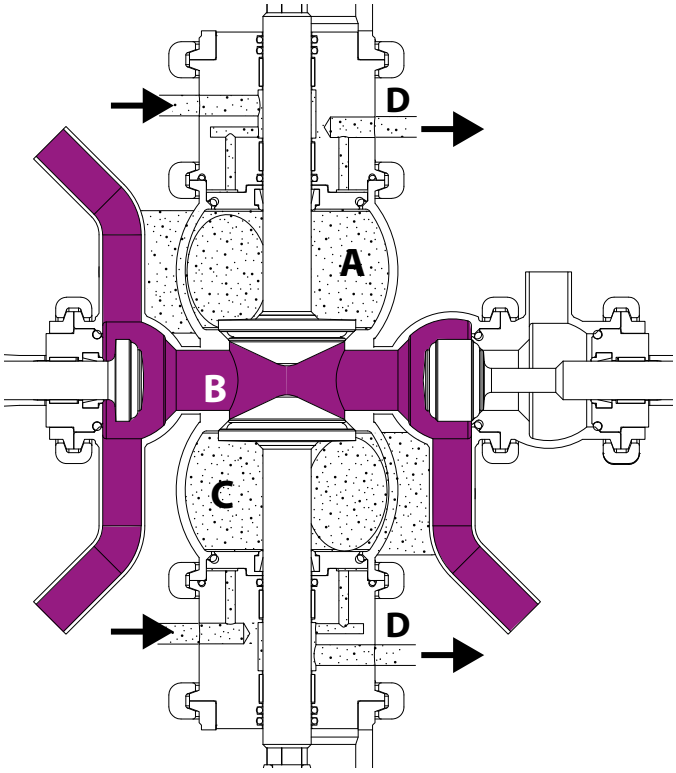

A: Product 1
B: Steam
C: Product 2

Step 4
Top line flush with full opening to create the turbulence needed to flush the leak chamber as well as the piping.
(auxiliary valves closed)

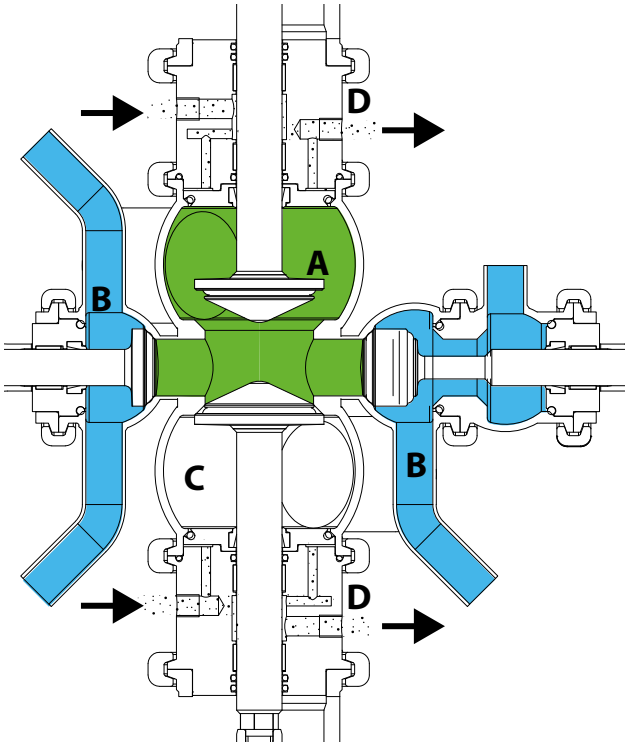

A: Product
B: Steam
C: Steam
D: Steam

Step 5

Lower line flush with full opening to create the turbulence needed to flush the leak chamber as well as the piping.
(auxiliary valves closed)

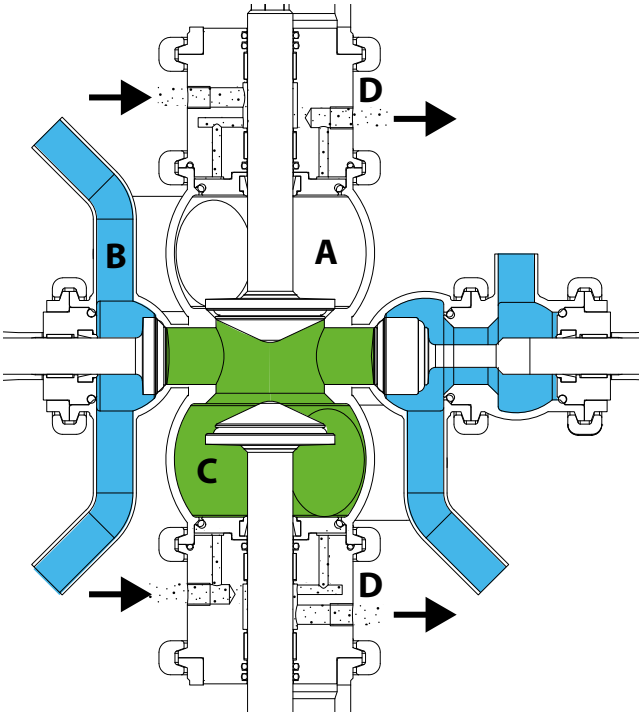

A: Empty pipe
B: Steam
C: CIP
D: Steam

Step 5A

Lower line flushing with lower lift, auxiliary valves are open for CIP flushing.

(auxiliary valves open, upper valve closed)

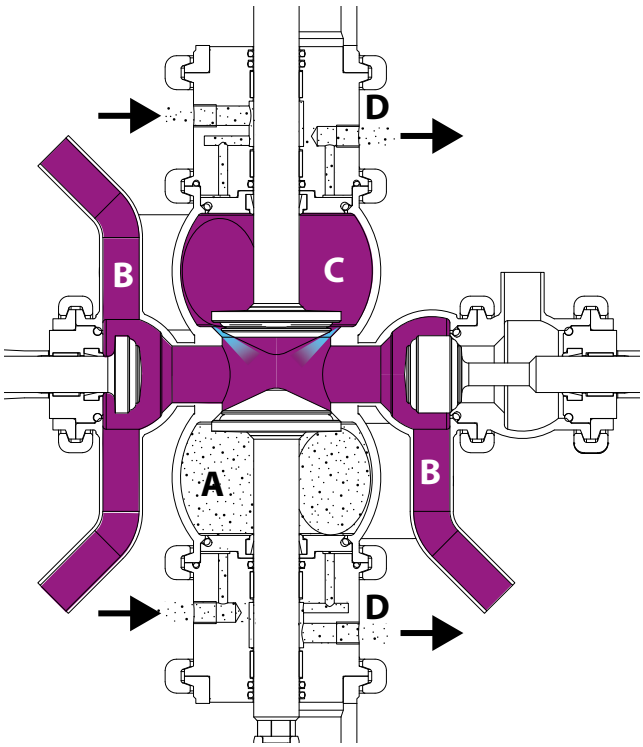

A: Empty pipe
B: Steam
C: Steam
D: Steam

7 Troubleshooting

PROBLEM	POSSIBLE CAUSE	POSSIBLE SOLUTION
External leak	Worn gasket	Replace the seal
Leaks inside the closed valve caused by normal wear		
External leak	Excessive pressure	Replace with gaskets made from a different type of elastomer
	Excessive temperature	
Premature leaks inside the closed valve	Aggressive fluids	Modify the operating conditions
	Too many commands active	
Difficulty opening and closing	Incorrect type of elastomer used for the gaskets	Replace with a gasket of a different type of elastomer
	Incorrect positioning of the actuator	Install the actuator correctly
	Impurities in the actuator	Actuator inspection and maintenance
	Incorrect valve body positioning	Disassemble and correctly reposition the valve body

8 Cleaning

1. VALVE CLEANING WITH DETERGENTS:

The system in which the valve is installed must be cleaned by expert personnel in observance of the following:

- Abide by the indicated detergent concentration values;
- Observe the instructions provided by the detergent manufacturer.
- Always wear protective safety glasses and gloves.

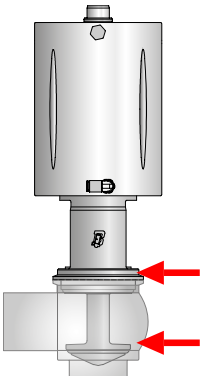

IMPORTANT!

- Accurately dose detergents to avoid excessive concentration;
- Always rinse thoroughly with clean water after washing.
- Check compatibility of valve materials.

WARNING!

Burns hazard. The valves and piping may be very hot. Wear protective gloves

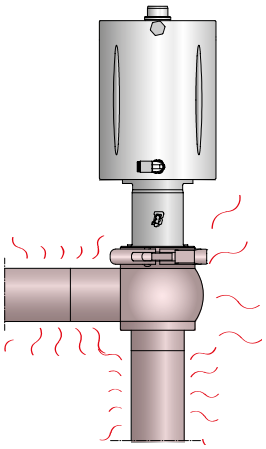

CAUTION

After installing a new or serviced valve, perform an internal washing cycle before using the piping for food liquids. If it there has been any welding work, passivation treatment must be carried out.

EXAMPLE OF INTERNAL WASHING CYCLE (CIP)		
Phases	Temperature °C	Washing product
Initial rinse	Environment	Chlorine- and chloride-free water
Washing	70 °C	Caustic soda (NaOH) at 1%
Intermediate rinse	Environment	Chlorine- and chloride-free water
Washing	70 °C	Nitric acid (HNO3) at 0.5%
End rinse	Environment	Chlorine- and chloride-free water

Recommended washing product velocity = 2m/s

9 Disposal

At the end of its service life, the device must be recycled in accordance with the legislation in force in the country of valve use.
Any hazardous residues must be taken into consideration and adequately handled.
The valve is made of AISI 316L and AISI 304 stainless steel, elastomers (gaskets), plastic (control unit) and electrical components (terminal boards, solenoid valves, sensors).

Adhere to the following steps before disconnecting the valve and refer to the heading "General Maintenance".

- make sure the line on which the valve is installed in is not in use
- empty the line on which the valve is installed and clean if necessary
- disconnect the air supply if it is not required during dismantling
- disconnect the valve from the power supply
- remove the valve from the system
- move the valve in observance of the rules set out in the heading "Lifting"
- to dismantle the valve, refer to the heading "Disassembly"

10 Maintenance

10.1 General maintenance

1. MAINTENANCE PRECAUTIONS
Maintenance operations must be carried out by expert technicians only.

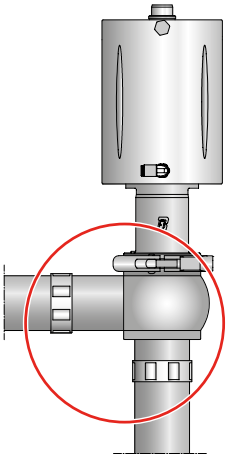

WARNING!
Maintenance operations must be carried out with the line stopped and all utilities (electricity, compressed air) disconnected.

WARNING!
Always discharge the fluid pressure in the valve and piping before disassembling the valve.

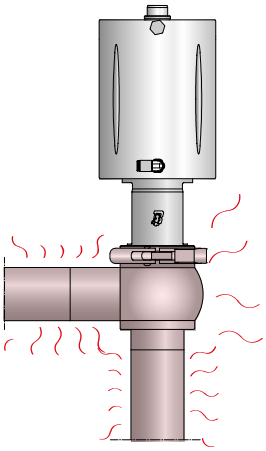

WARNING!
Burns hazard. The valves and piping may be very hot. Wear protective gloves

2. CLEANING AWAY DEPOSITS:

- Thoroughly wash and clean all the valve parts before disassembly;
- Pay attention to any possible detergent or other aggressive fluid deposits (see "Cleaning");
- Always use protective safety glasses and gloves when required.

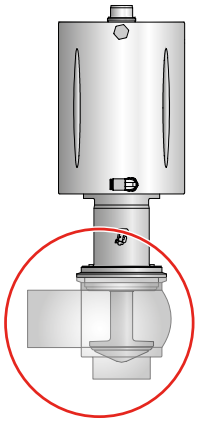

WARNING!

Hand crushing hazard. During operation there is a risk of crushing inside the valve body in the area between the actuator and the valve body.

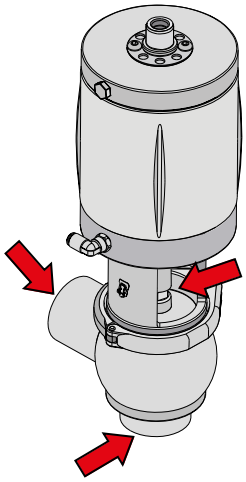

3. REPLACEMENT OF WORN VALVE PARTS:

Always use original spare parts

10.2 Scheduled maintenance

SCHEDULED MAINTENANCE	VALVE GASKETS	ACTUATOR GASKETS
Preventive	Replace after 12 months	Replace after 24 months
In the event of leaks	Replace at the end of the day	Replace in the event of leaks
Periodical	Check correct operation and that there are no leaks	Check correct operation and that there are no leaks
	Record the actions carried out	Record the actions carried out

10.3 Tools useful for Disassembly/Reassembly

TOOLS	DN25	DN32	DN40	DN50	DN65	DN80	DN100
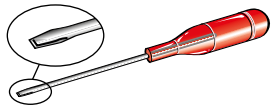	✓						
	4 - 6 - 8						
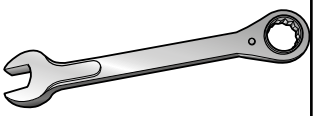	10-12 -13-19 -24	10-12-13-17-19-24		10-12-13-15-17-19-24	10-12-13-15-17-19-22-24	10-12-13-15-19-21-22-24	
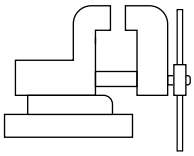	✓						
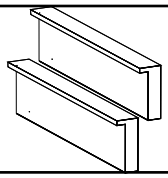	✓						
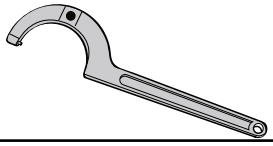	BETA 99ST 35-50						

10.4 Aseptic valve BZZYP

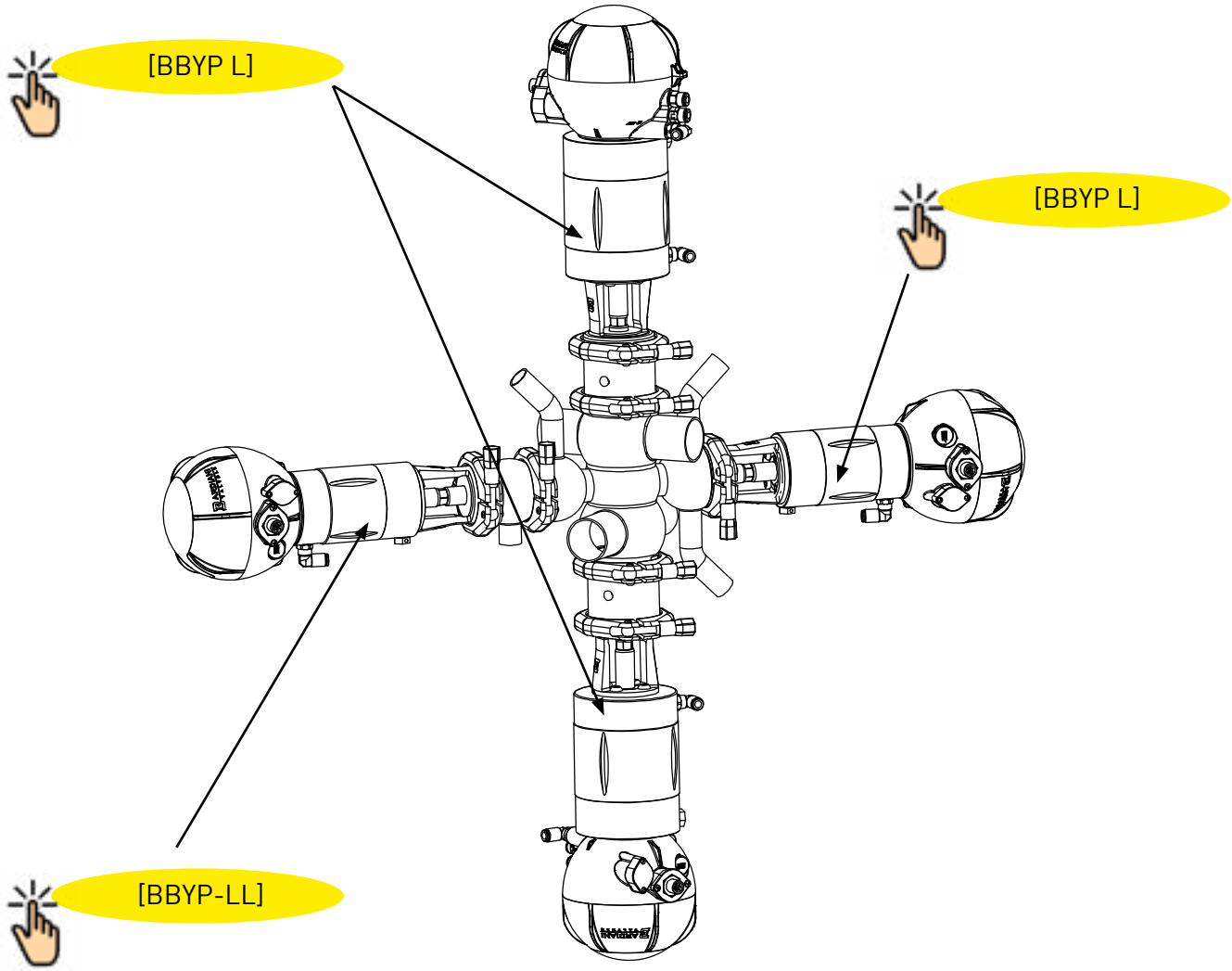

10.5 Aseptic valve BZZYT

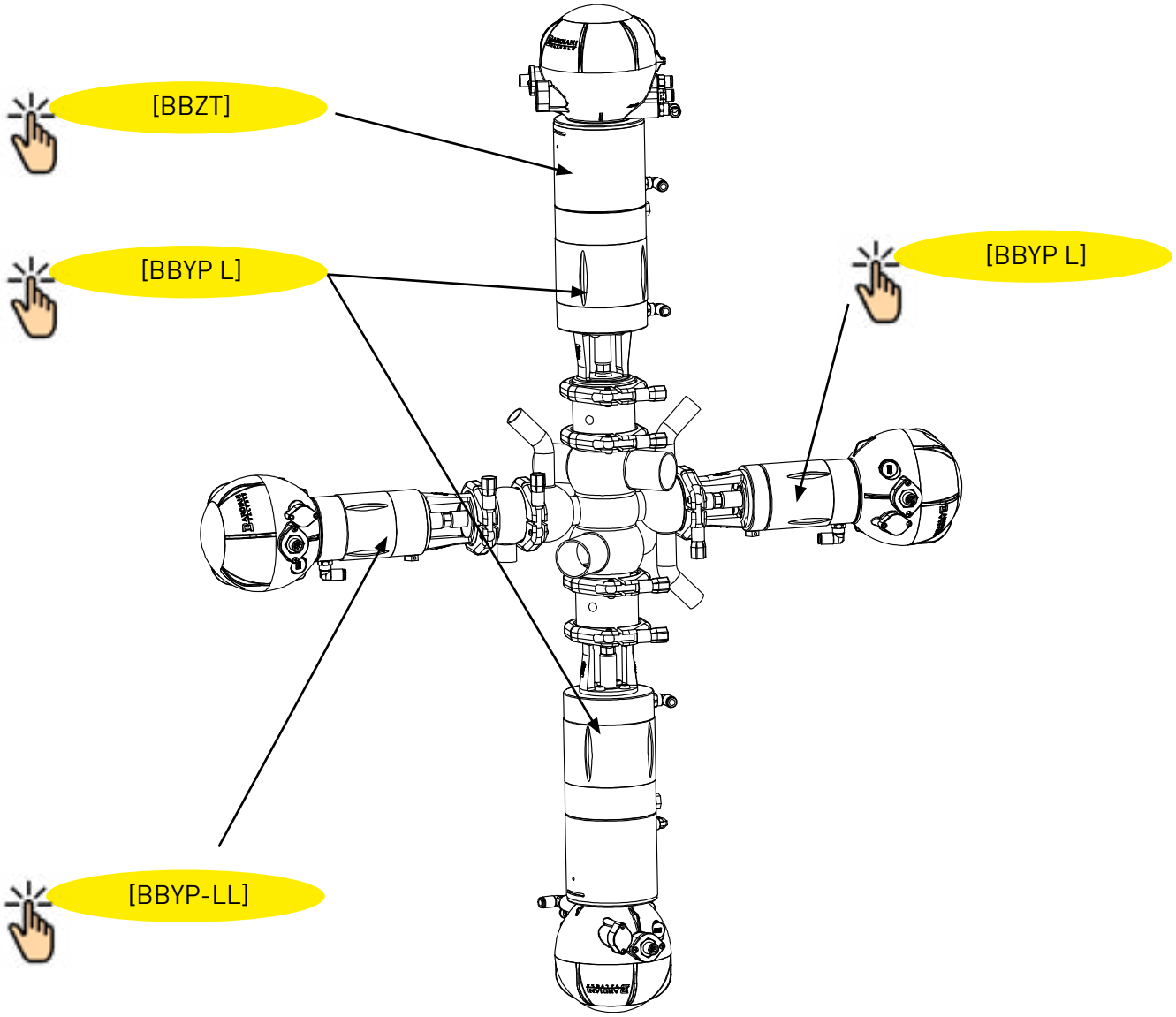

10.6 Pneumatic Valves BBZP - BBYP - BBYT

NO.	DESCRIPTION
1	Lower body
2	Valve member
6	Sealing ring
7	Sealing washer
8	Screw
9	Cylinder
10	Bush
14	Sealing ring
17	Bush
19	Sealing ring
24	Air connector
28	Valve member nut
33	Clamp
34	Screw
35	Assembly
40	Cap
42	Upper body
45	Steam barrier
47	Sealing ring
50	Gasket holder disc
57	Sealing ring
108	Sealing ring
120	Bush
154	Thickness
156	Sealing ring
157	Sealing ring
168	Bush
274	Sealing ring
275	Sealing ring
276	Sealing ring
277	Sealing ring

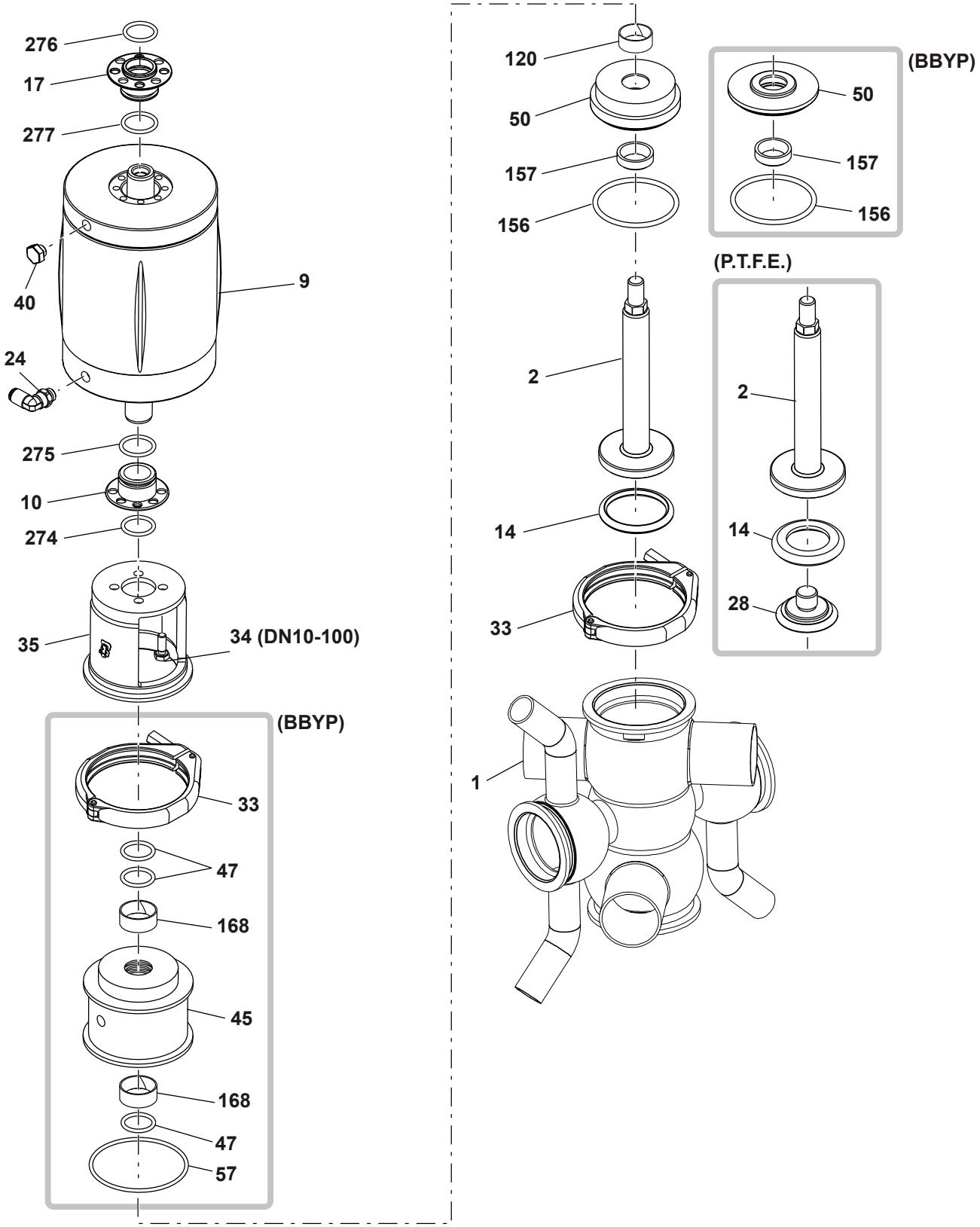
276
17
277
40
9
24
275
10
274
35
34 (DN10-100)
(BBYP)
33
47
168
45
168
47
57
120
50
157
156
(BBYP)
50
157
156
(P.T.F.E.)
2
14
33
2
14
28
1

10.7 BBZP - BBYP - BBYT disassembly

1-①

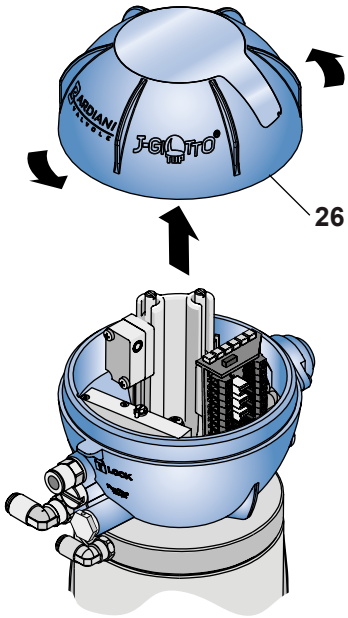

1-②

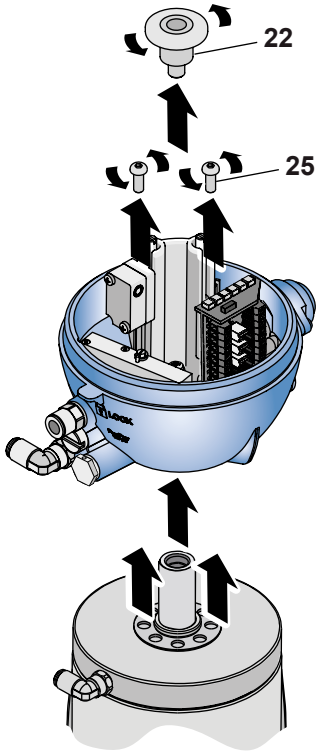

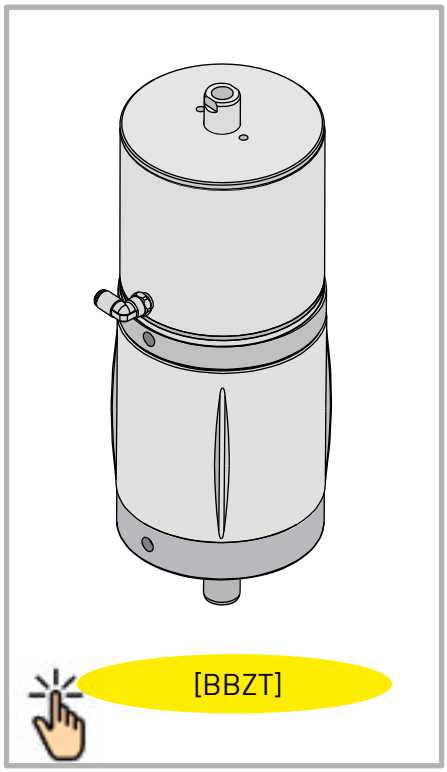

[BBZT]

1-③

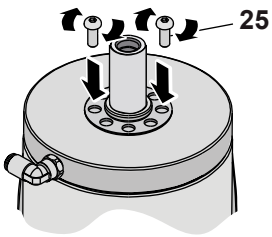

[BBZP-NA]

(Normally closed)

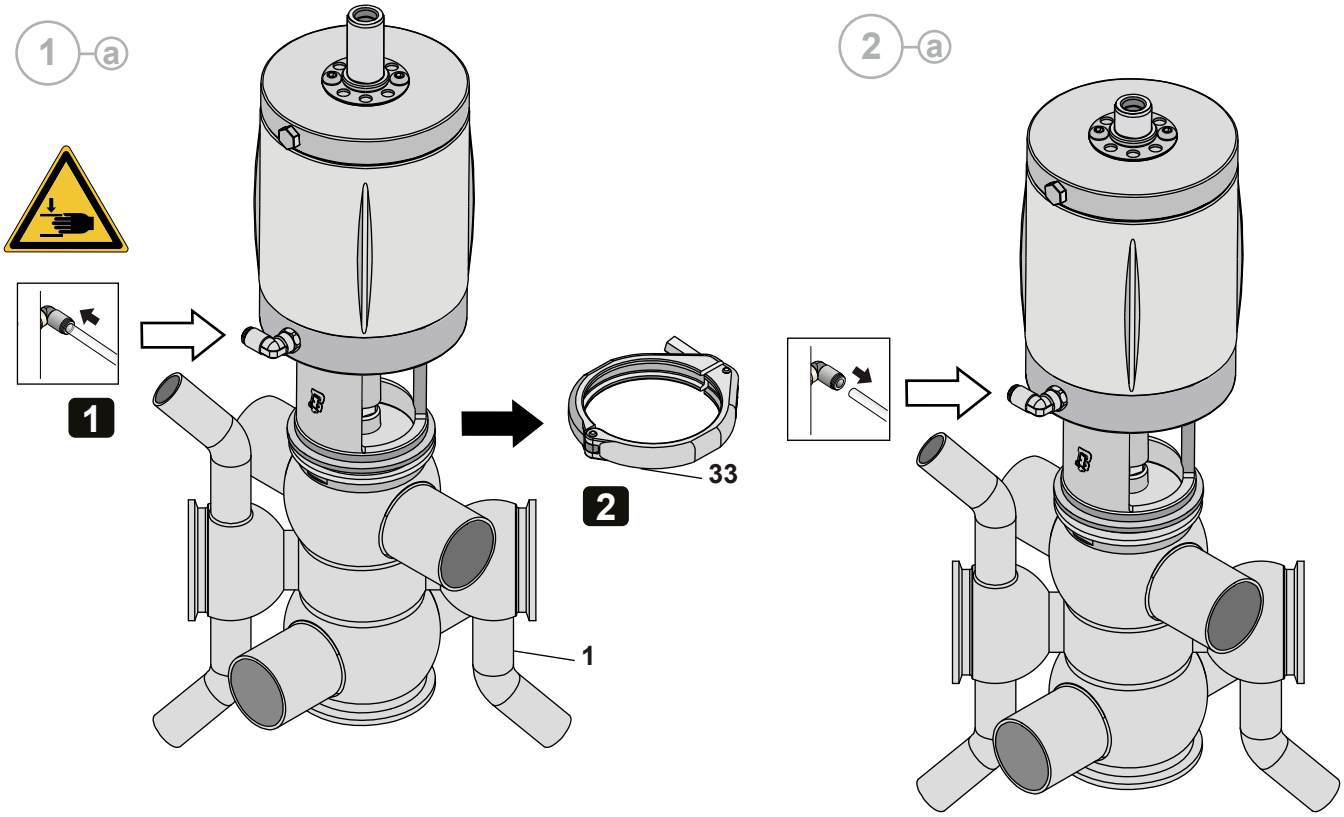

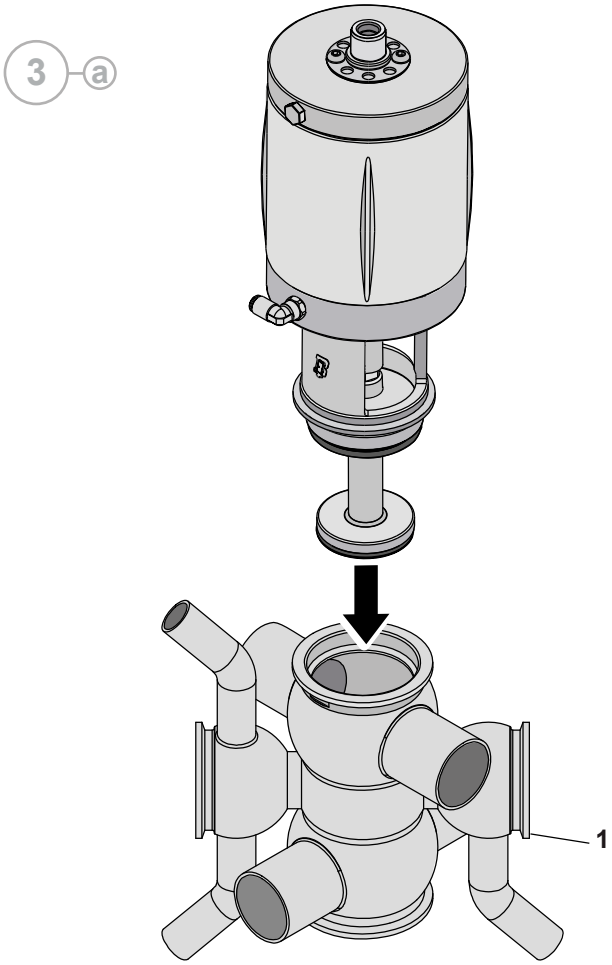

[BBYP L-S]

(Normally open)

1 b

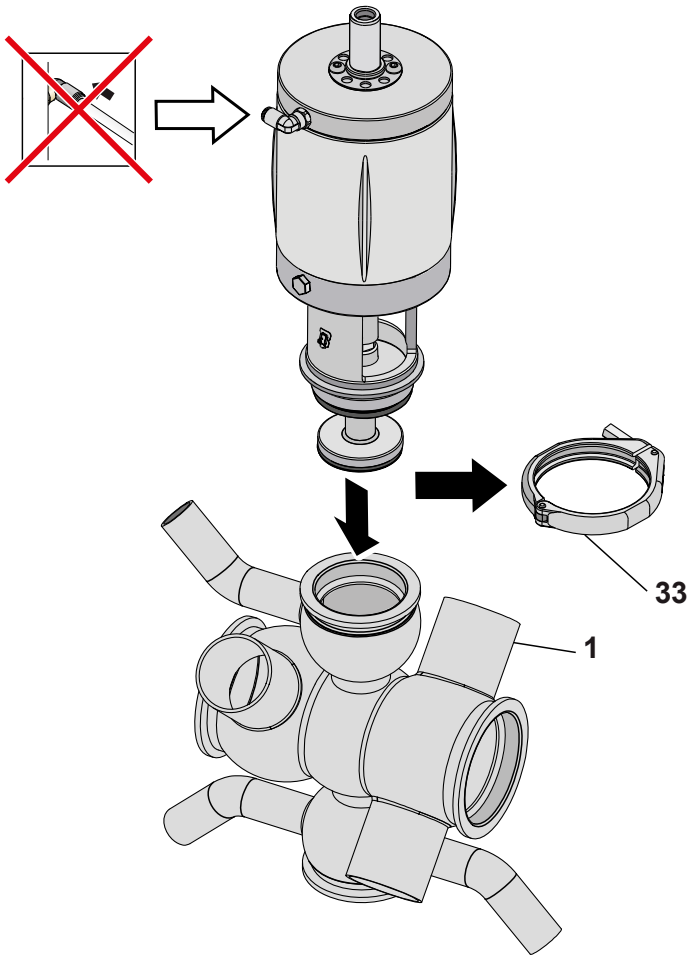

4 a

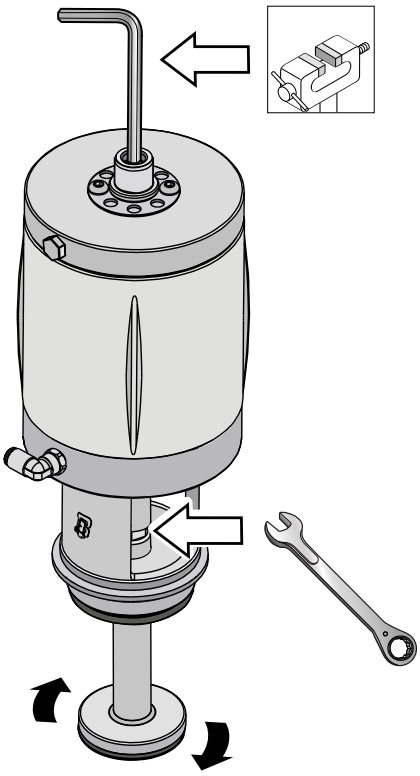

5 a

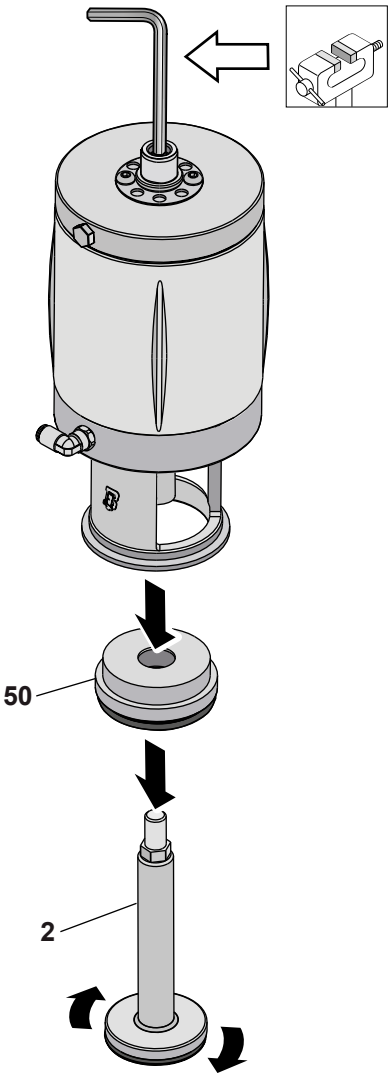

(BBYP - BBYR - BBYT)

4 d

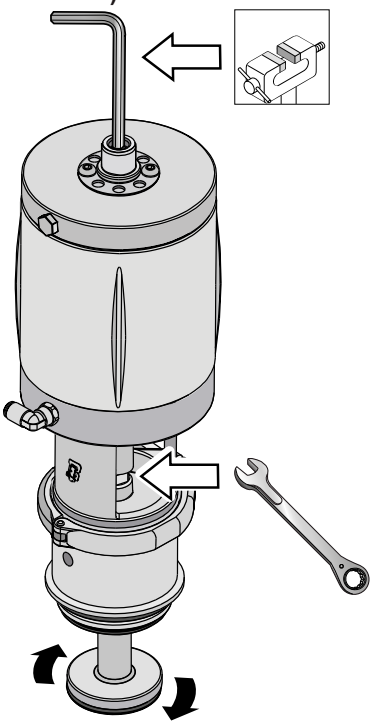

5 d

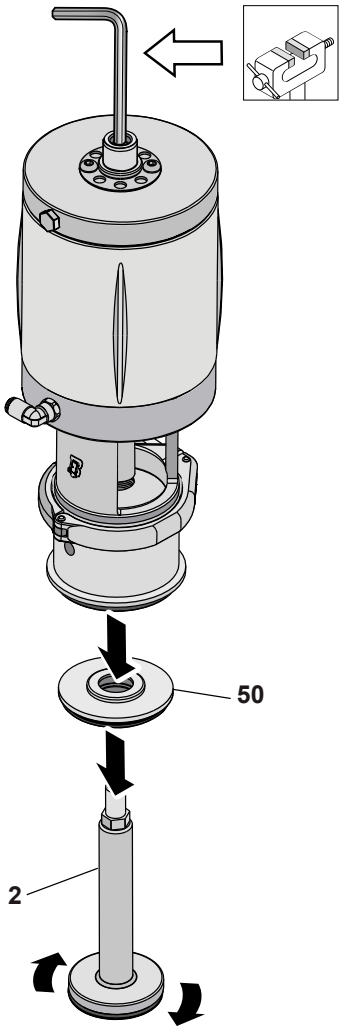

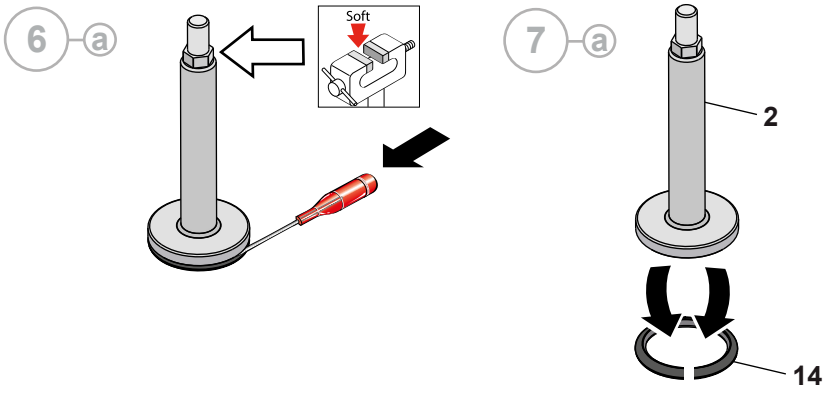
6 a
Soft
7 a
2
14

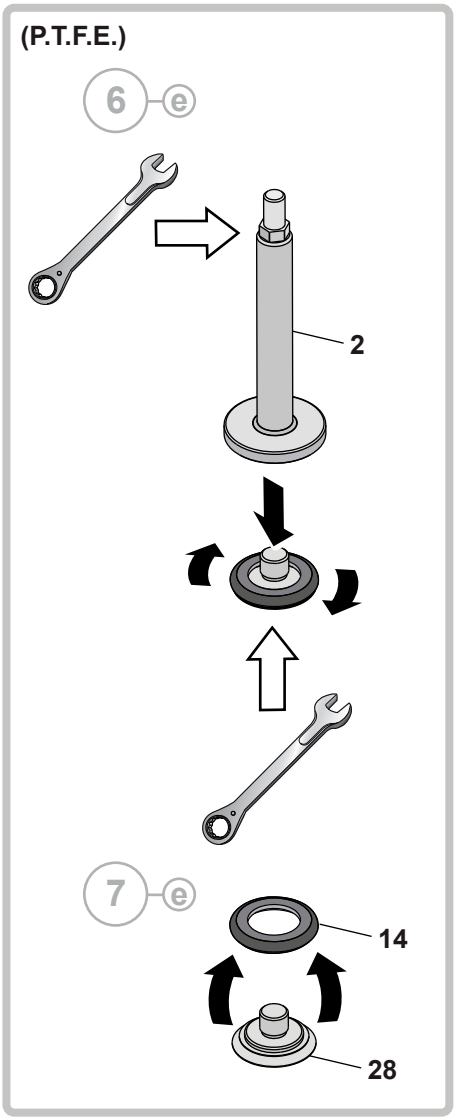
(P.T.F.E.)
6 e
2
7 e
14
28

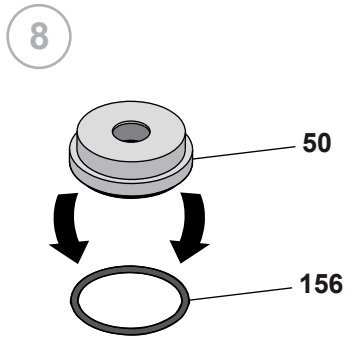
8
50
156

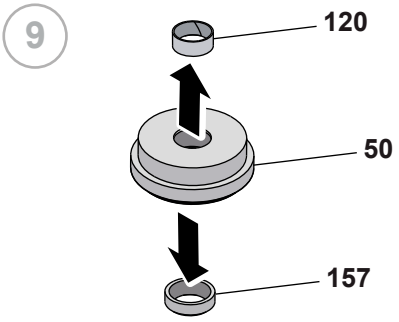
9
120
50
157

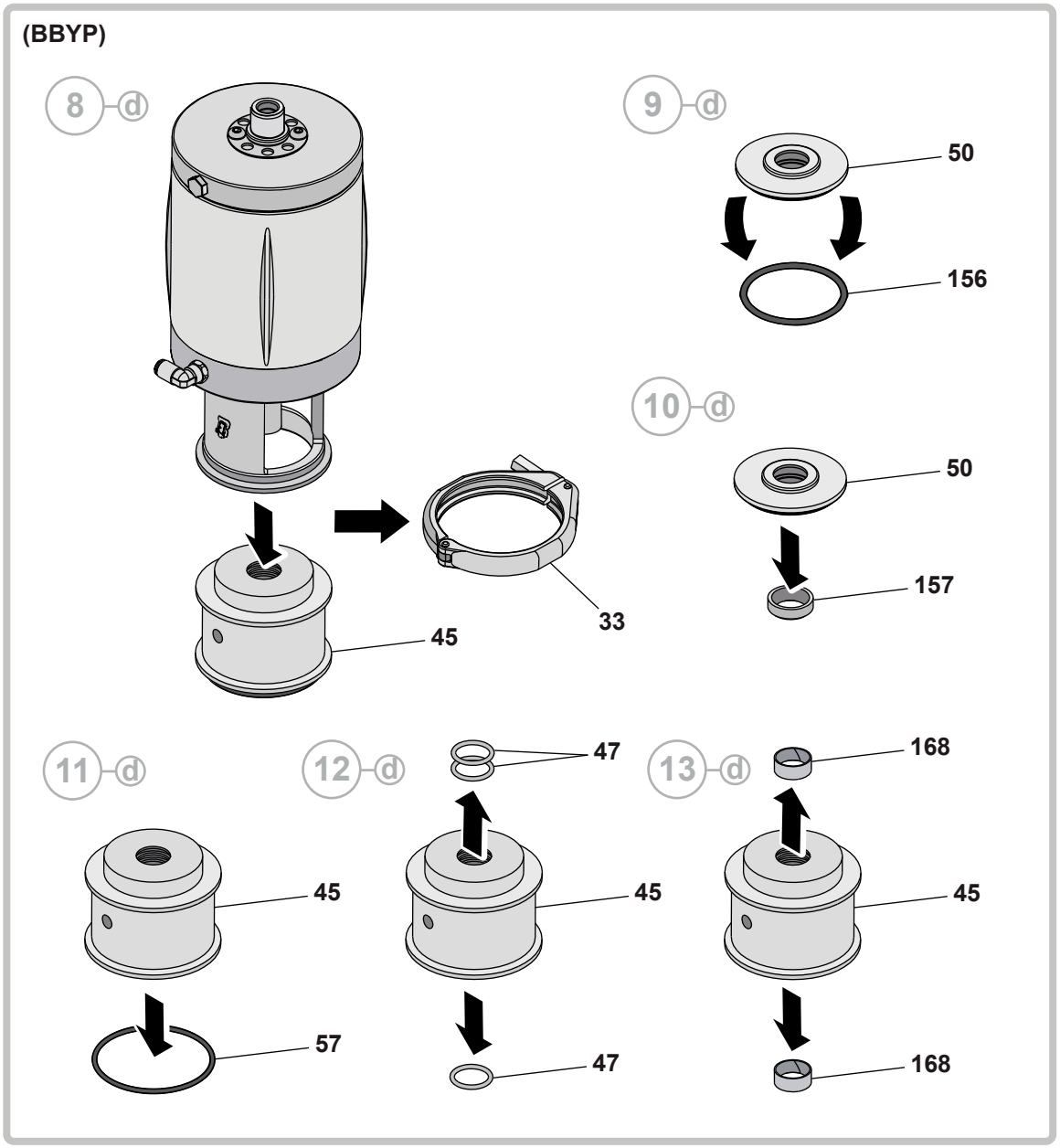
(BBYP)
8 d
9 d
50
156
10 d
50
157
33
45
11 d
12 d
13 d
47
168
45
45
45
57
47
168

14

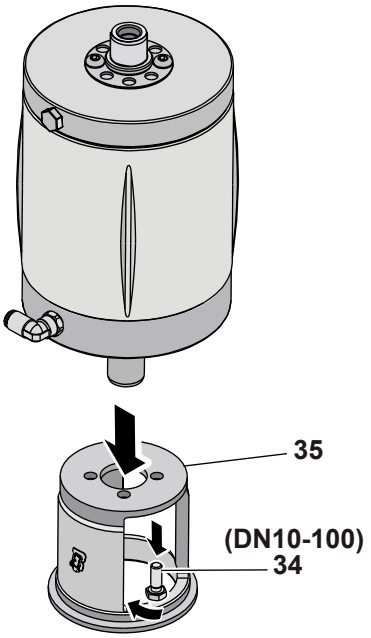

15

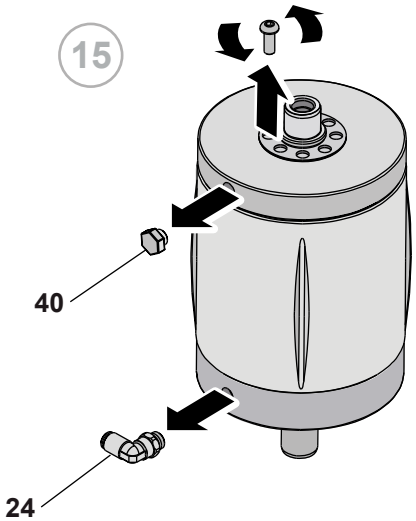

(BBZT)

16 f

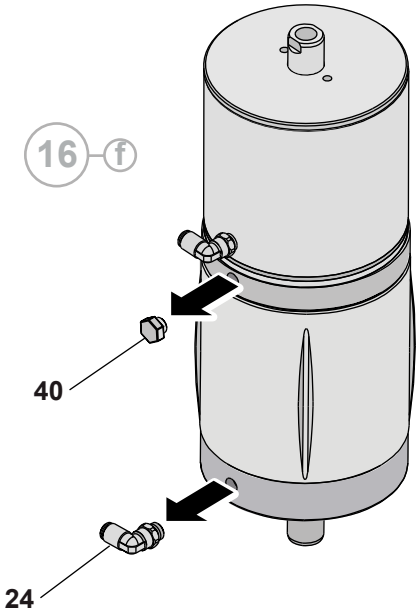

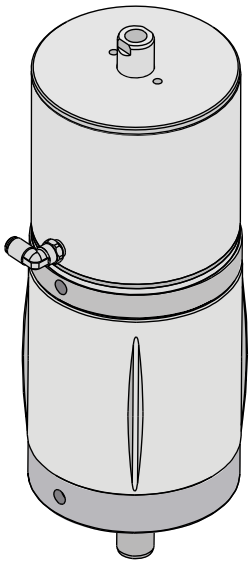

16

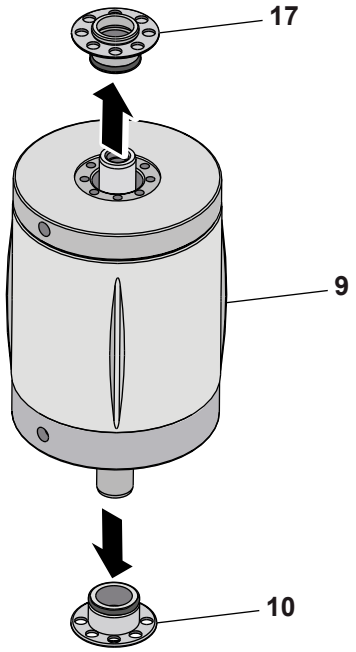

17

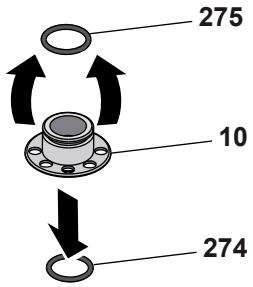

18

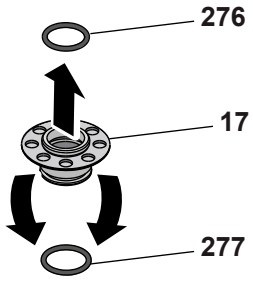

10.8 BBZP - BBYP - BBYT assembly

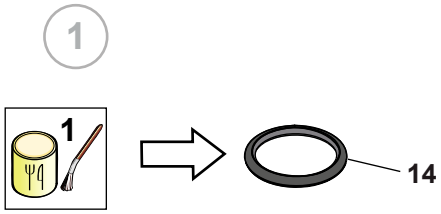

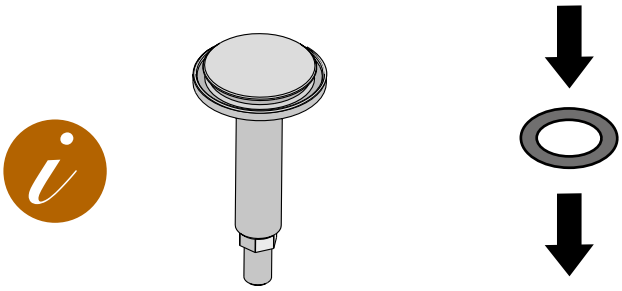

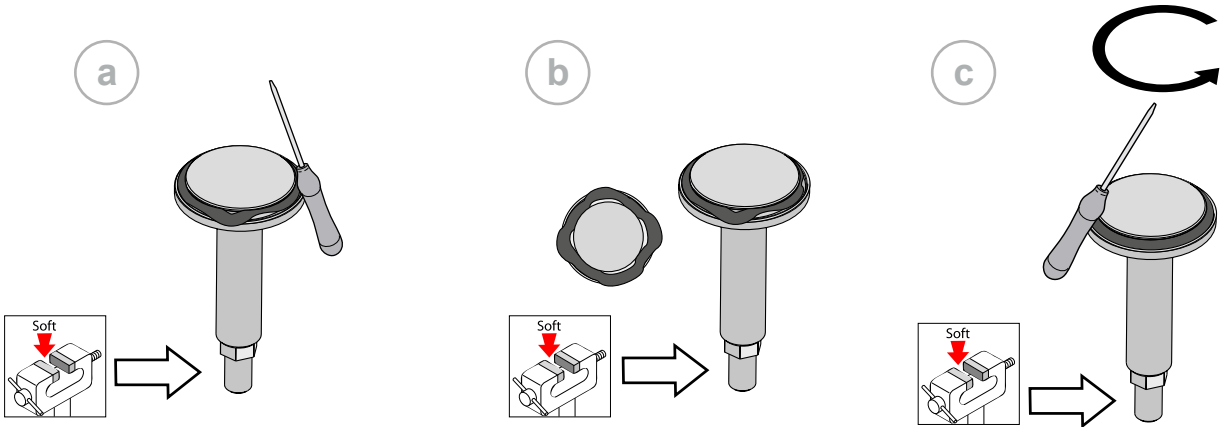

2

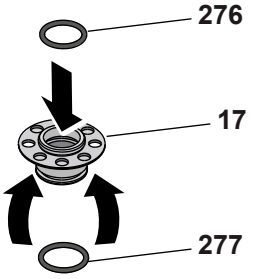

3

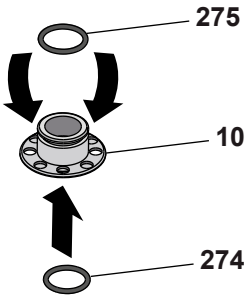

4

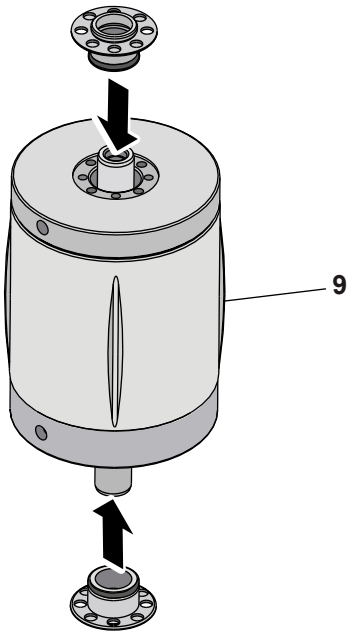

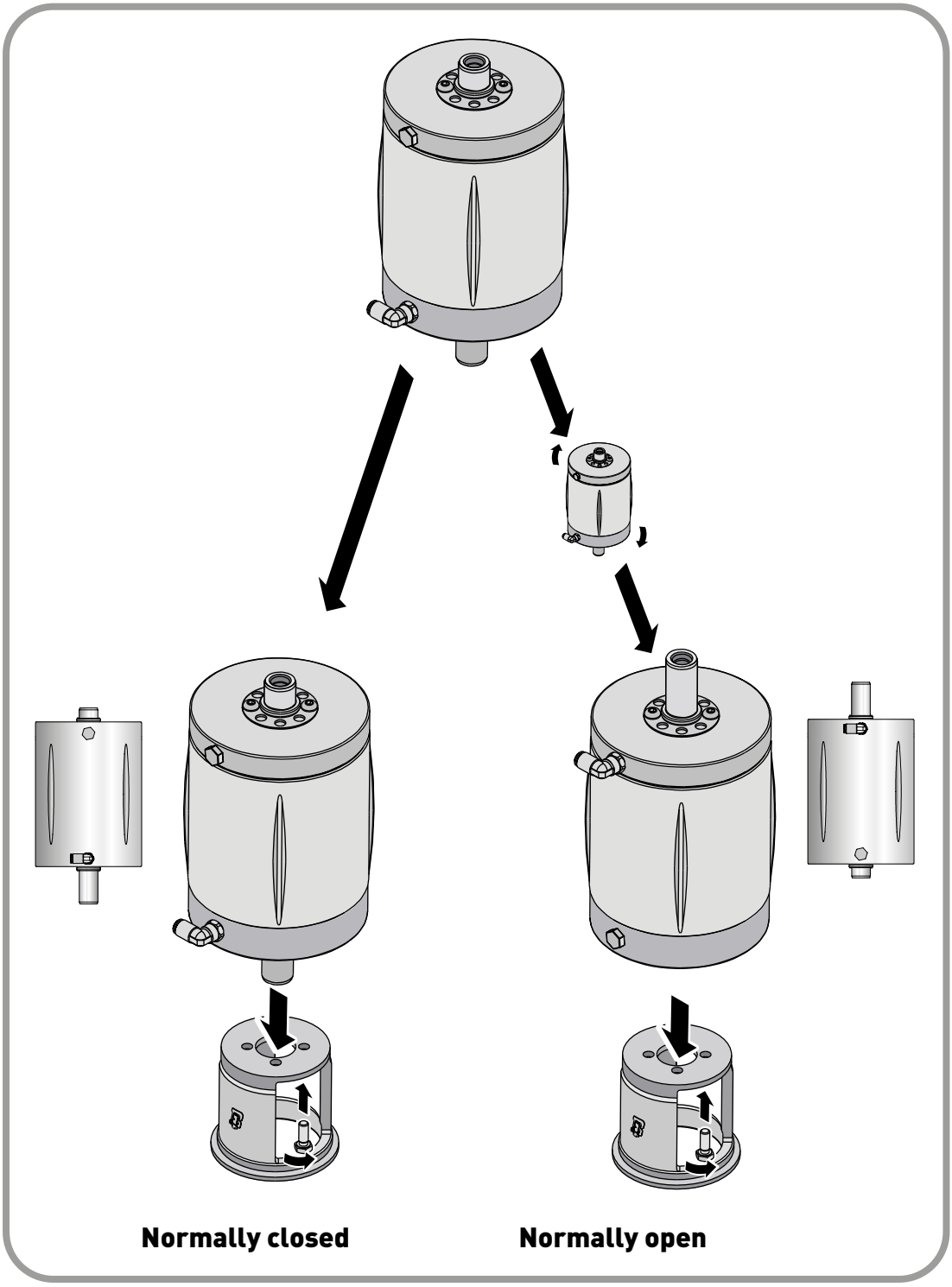
Normally closed
Normally open

5

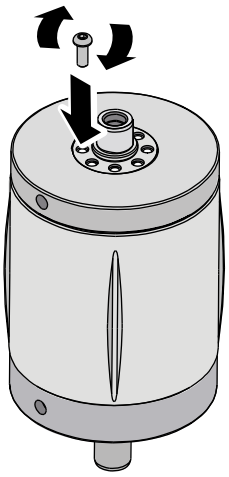

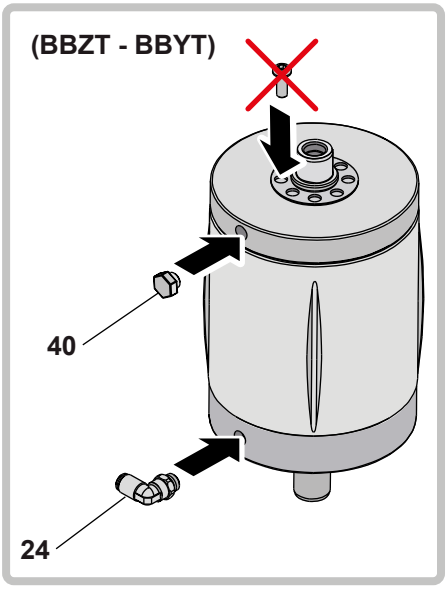

6

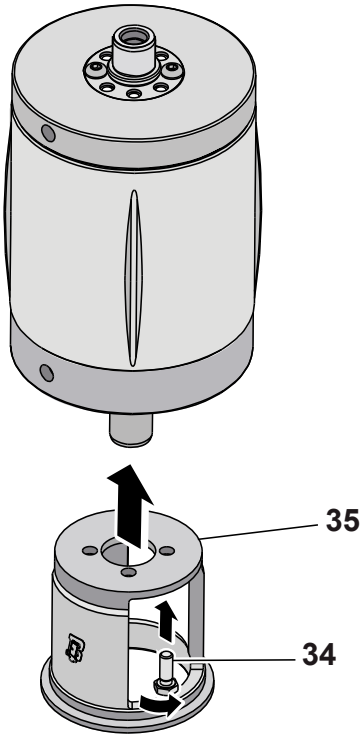

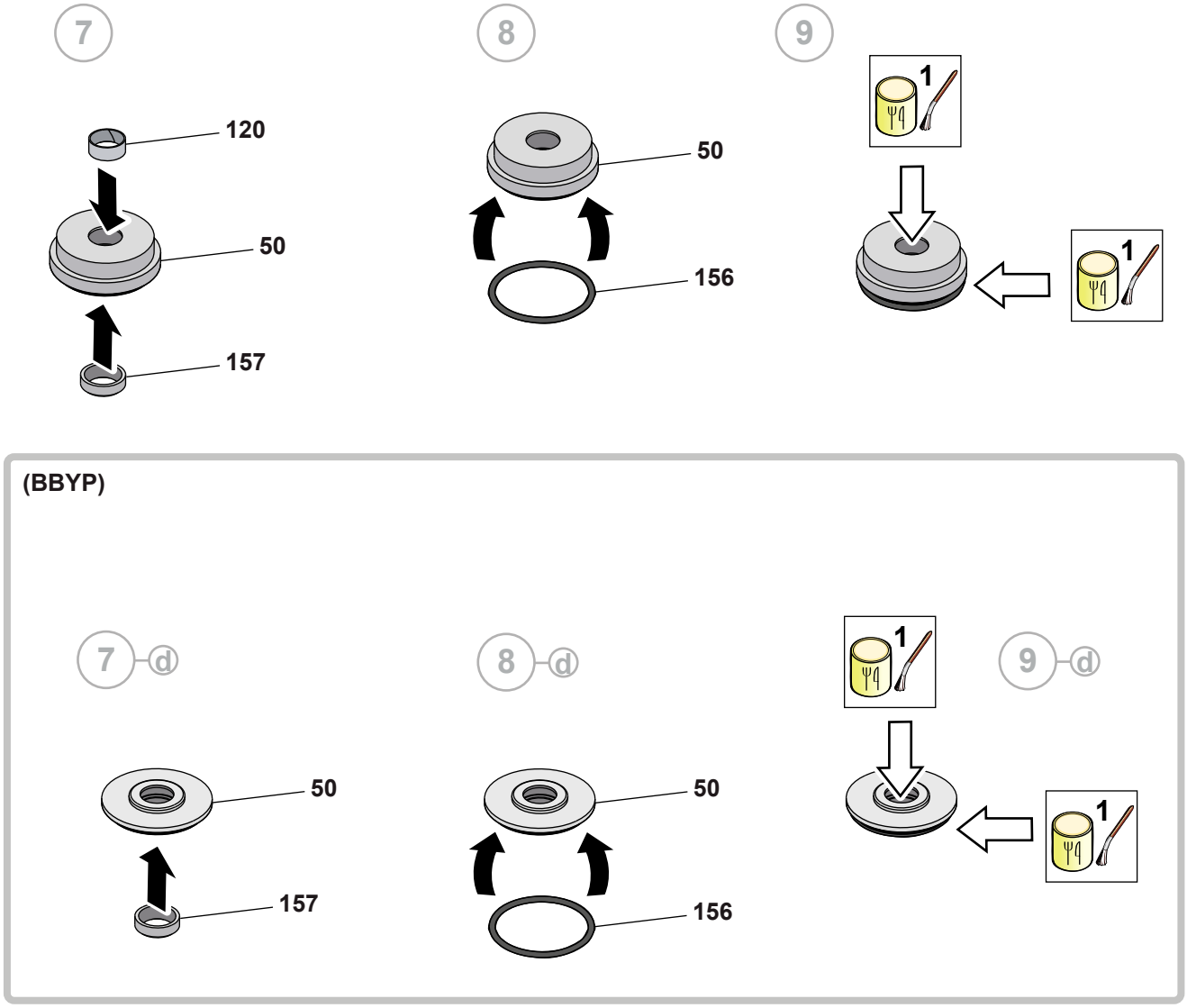
7
120
50
157
8
50
156
9
1
1
(BBYP)
7 d
50
157
8 d
50
156
1
9 d
1

(BBYP)

10-d

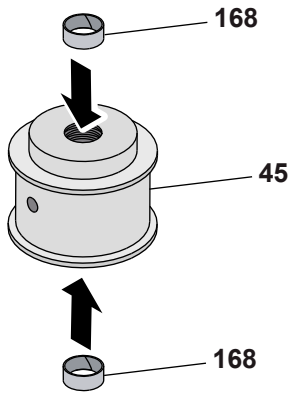

11-d

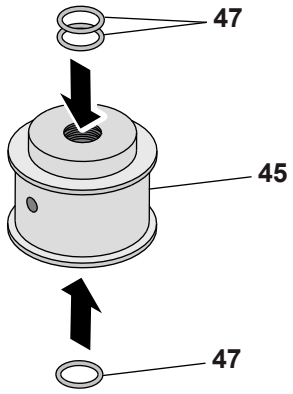

12-d

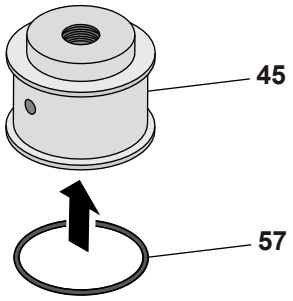

13-d

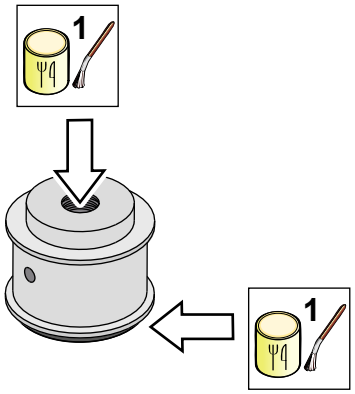

14-d

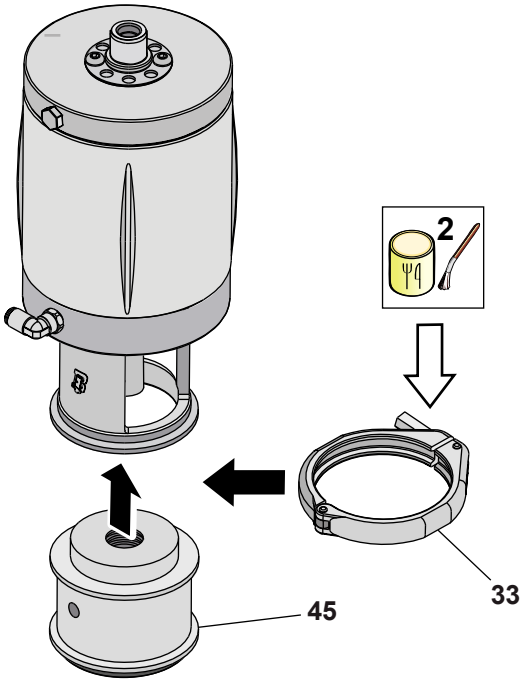

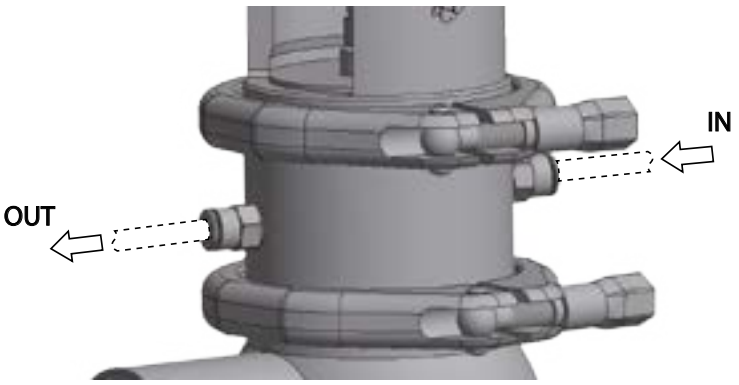

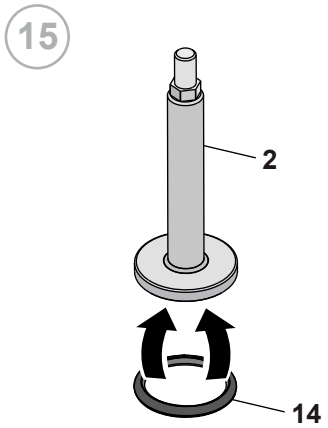
15
2
14

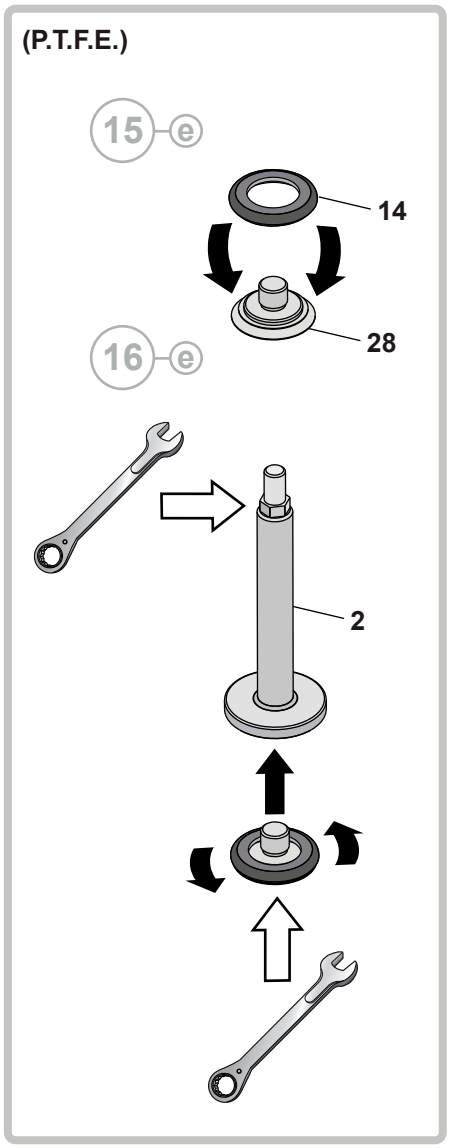
(P.T.F.E.)
15 e
14
28
16 e
2

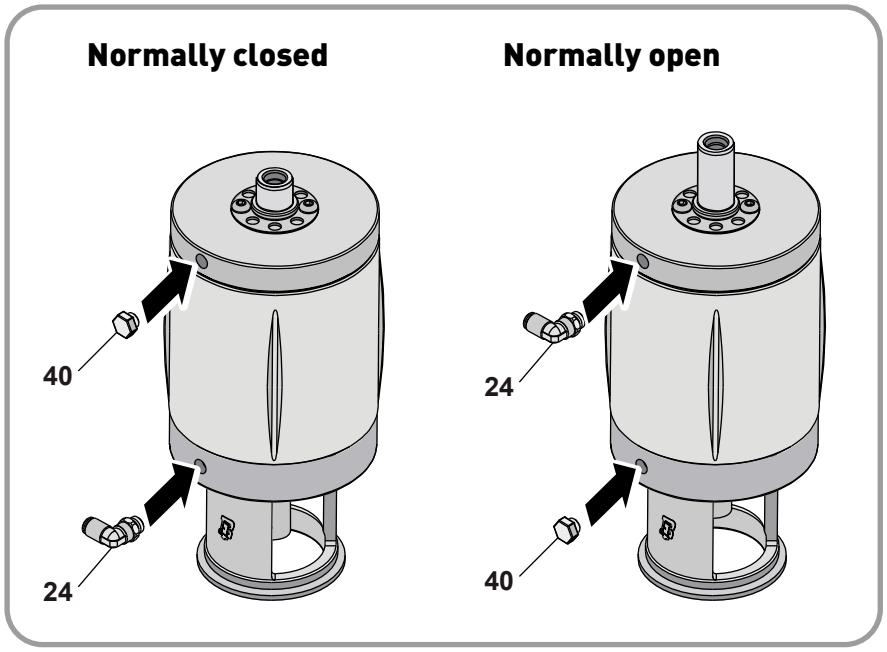
Normally closed
Normally open
40
24
24
40

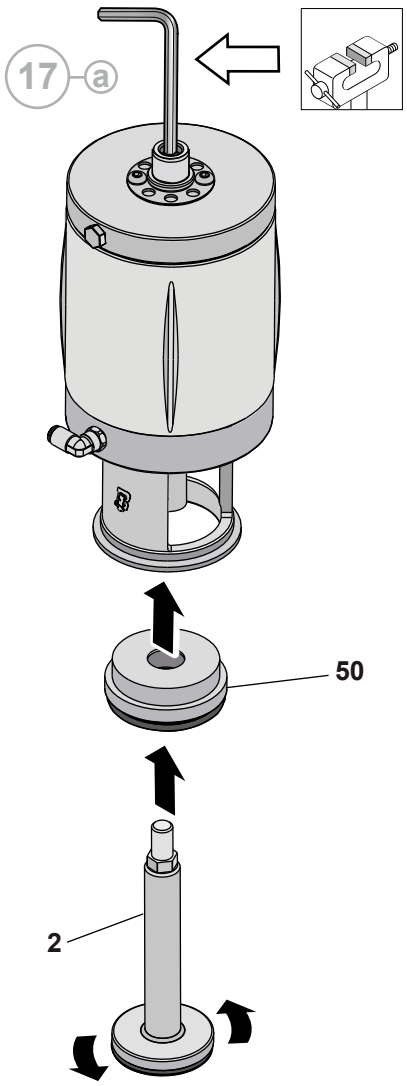

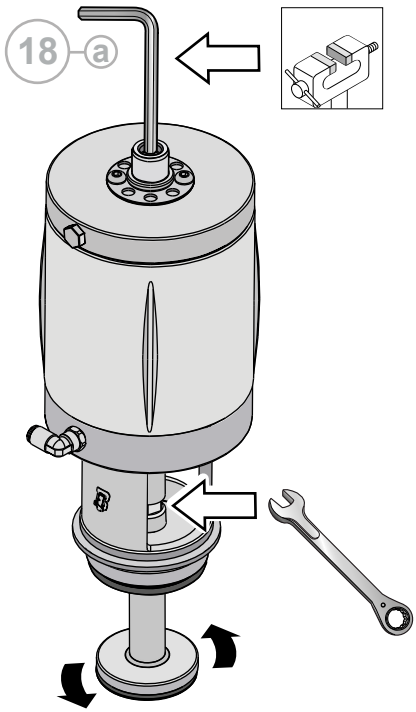

(BBYP)

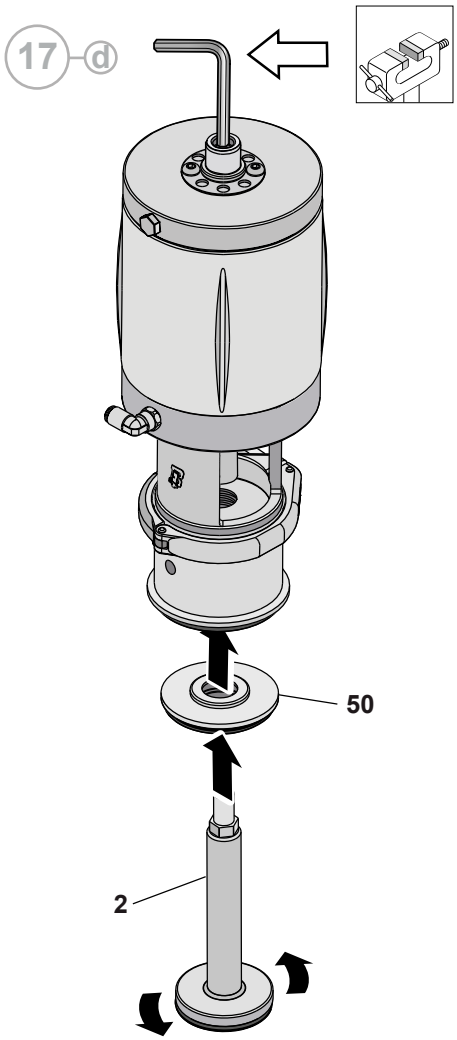

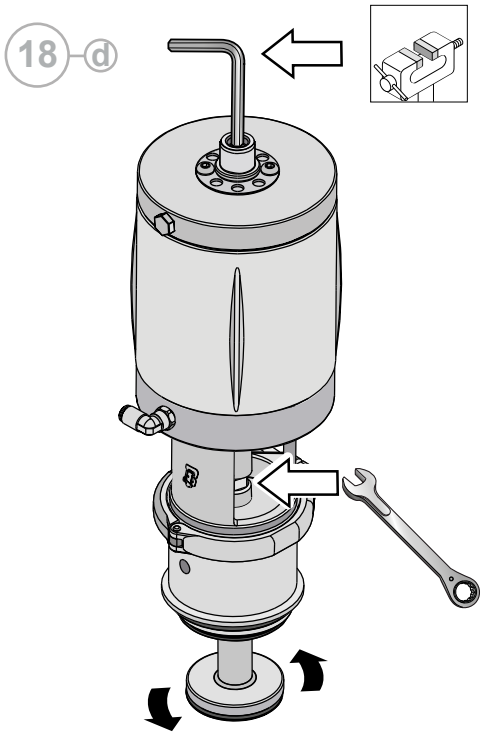

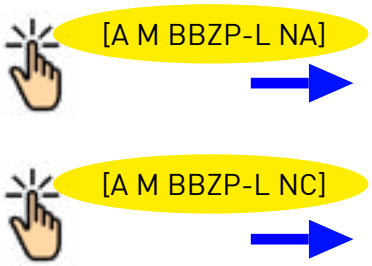

(Normally closed)

19 a1

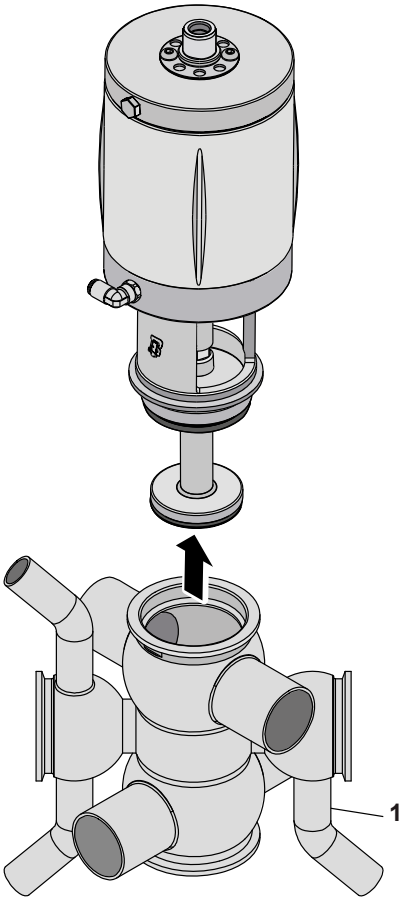

20 a1

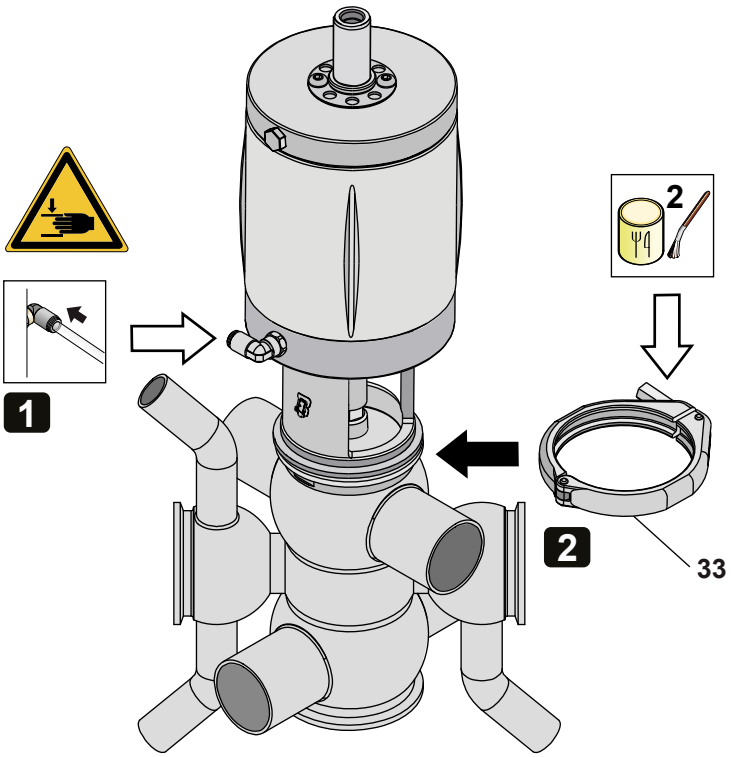

21 a1

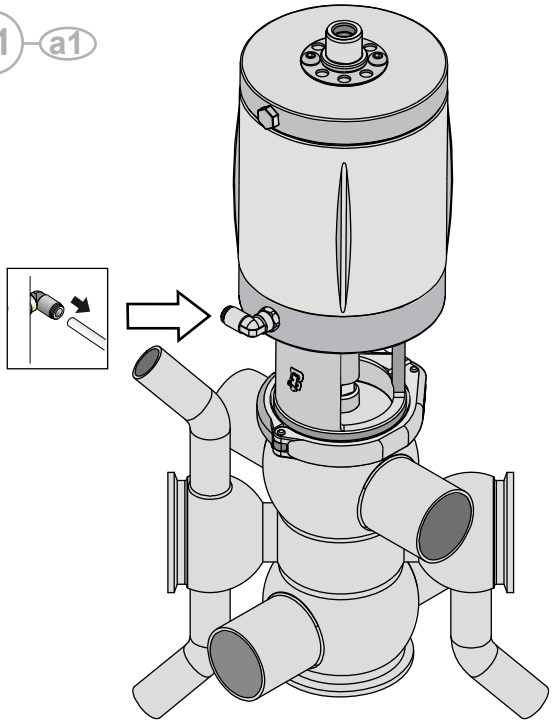

[A M BBZP-L 2]

(Normally open)

19 a2

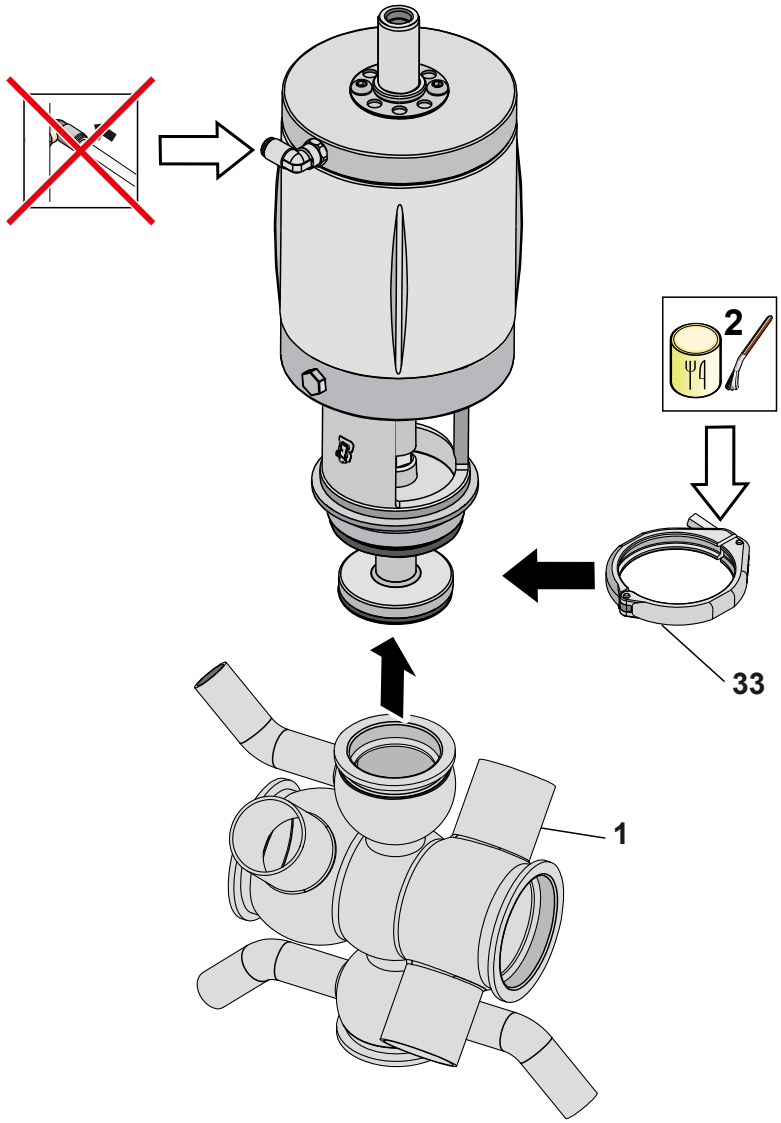

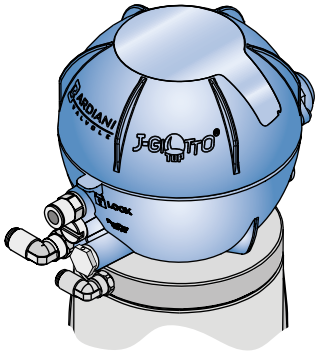

[GIOTTO]

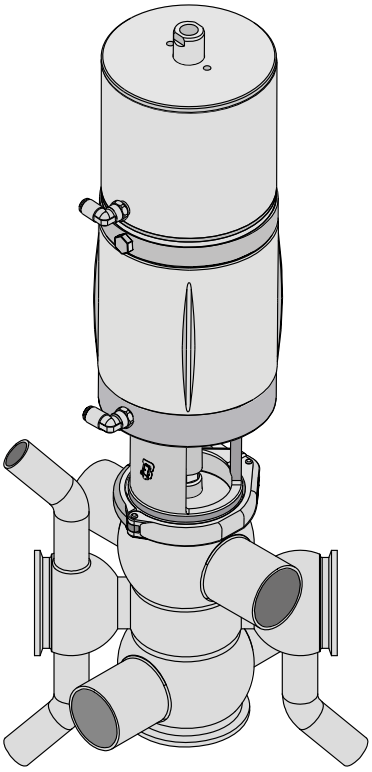

[BBZT]

10.9 Pneumatic Valves BBZP - BBZT- BBYP Diverter

NO.	DESCRIPTION
1	Lower body
2	Upper valve member
6	Sealing ring
7	Sealing washer
8	Screw
9	Cylinder
10	Bush
14	Sealing ring
17	Bush
19	Sealing ring
24	Air connector
28	Valve member nut
30	Double valve member
33	Clamp
34	Screw
35	Assembly
40	Cap
42	Upper body
45	Steam barrier
47	Sealing ring
50	Gasket holder disc
51	Lower valve member
57	Sealing ring
92	Intermediate body
94	Sealing ring
108	Sealing ring
120	Bush
154	Shim
156	Sealing ring
157	Sealing ring
168	Bush
212	Double valve member stem
213	Sealing ring
274	Sealing ring
275	Sealing ring
276	Sealing ring
277	Sealing ring

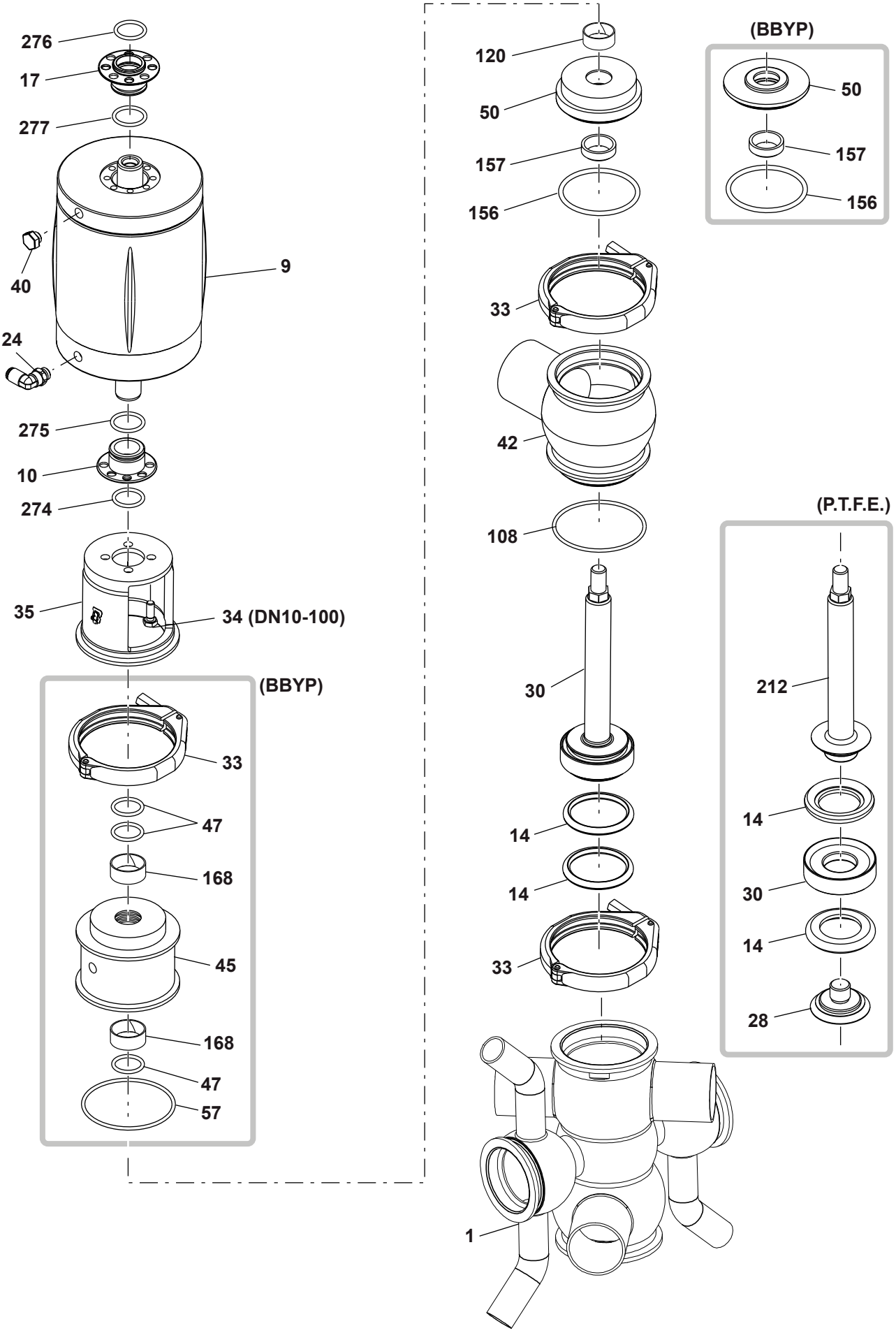
276
17
277
40
9
24
275
10
274
35
34 (DN10-100)
(BBYP)
33
47
168
45
168
47
57
120
50
157
156
33
42
108
30
14
14
33
1
(BBYP)
50
157
156
(P.T.F.E.)
212
14
30
14
28

10.10 BBZP - BBZT - BBYP Diverter disassembly

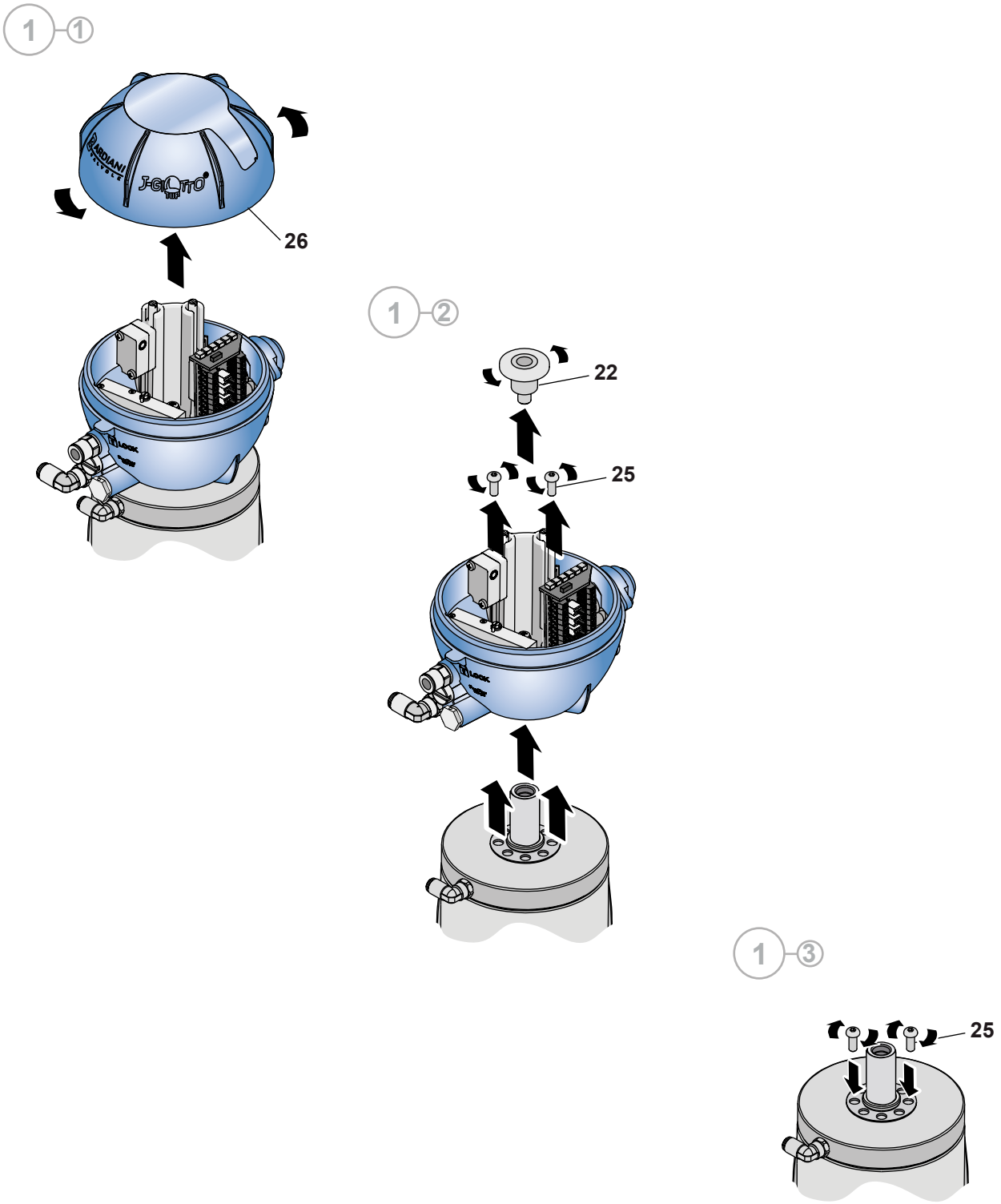

(Normally open)

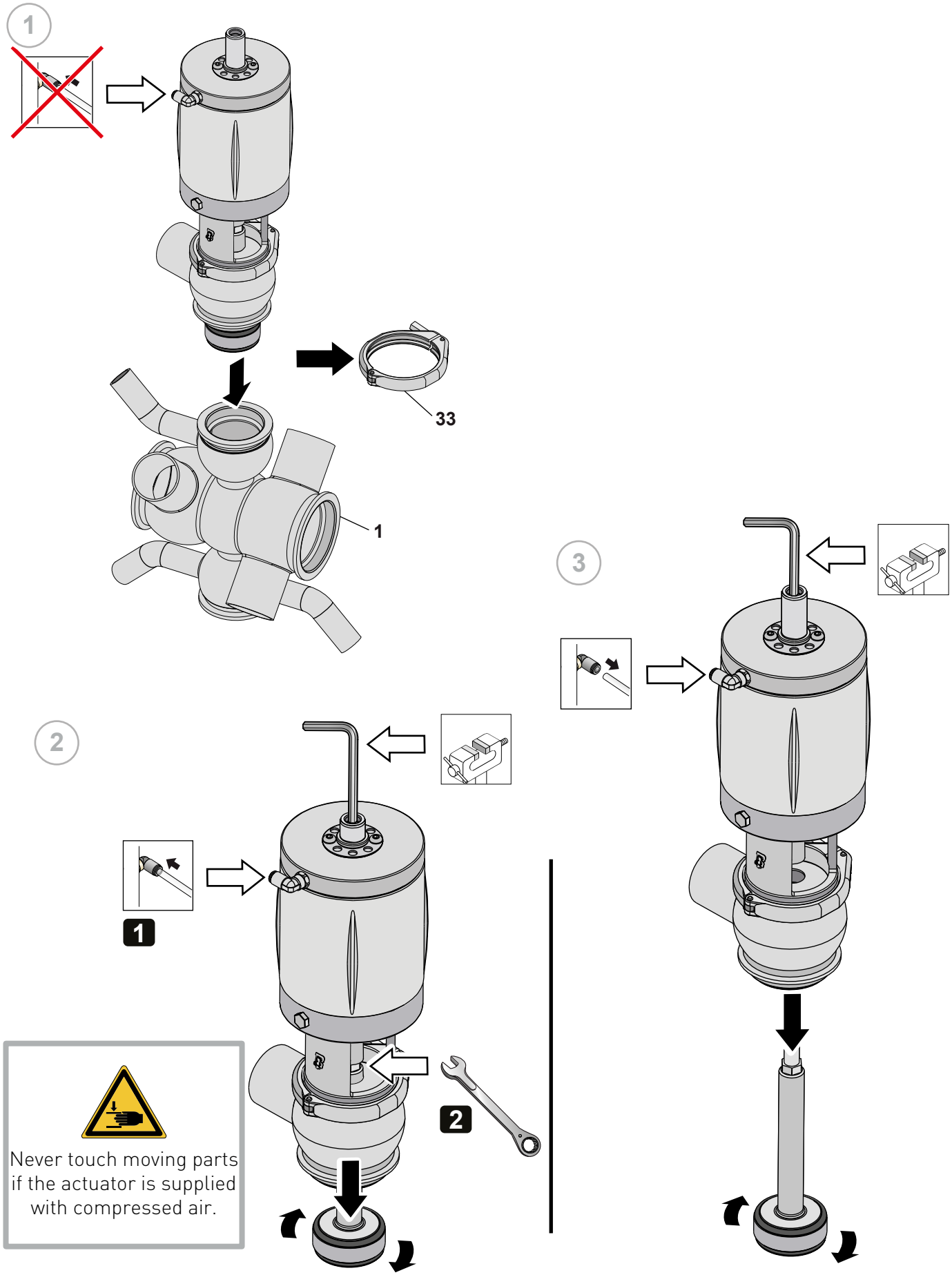

Never touch moving parts if the actuator is supplied with compressed air.

4 a

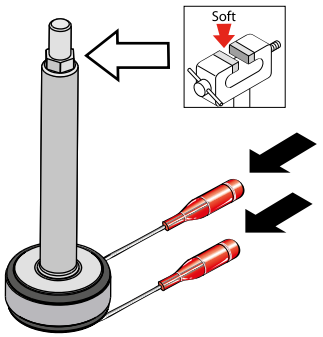

5 a

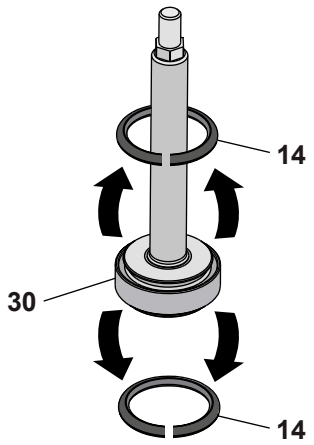

(P.T.F.E.)

4 e

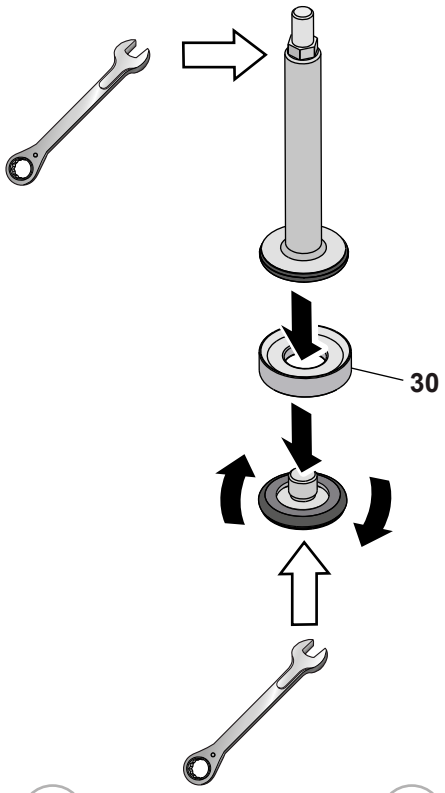

5 e

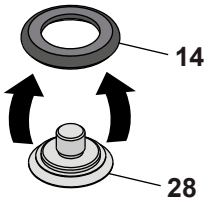

6 e

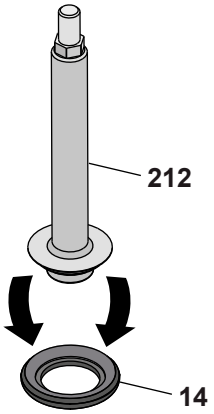

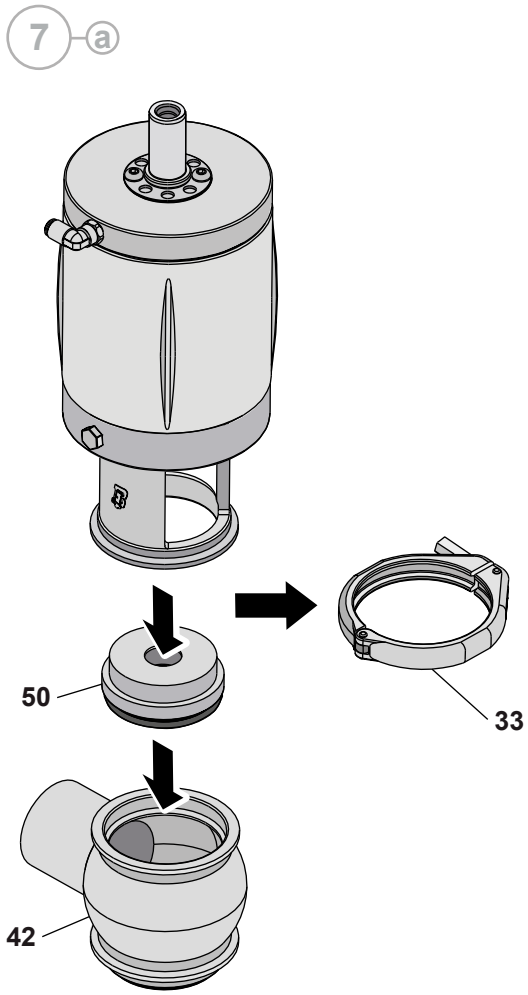
7 a
50
33
42

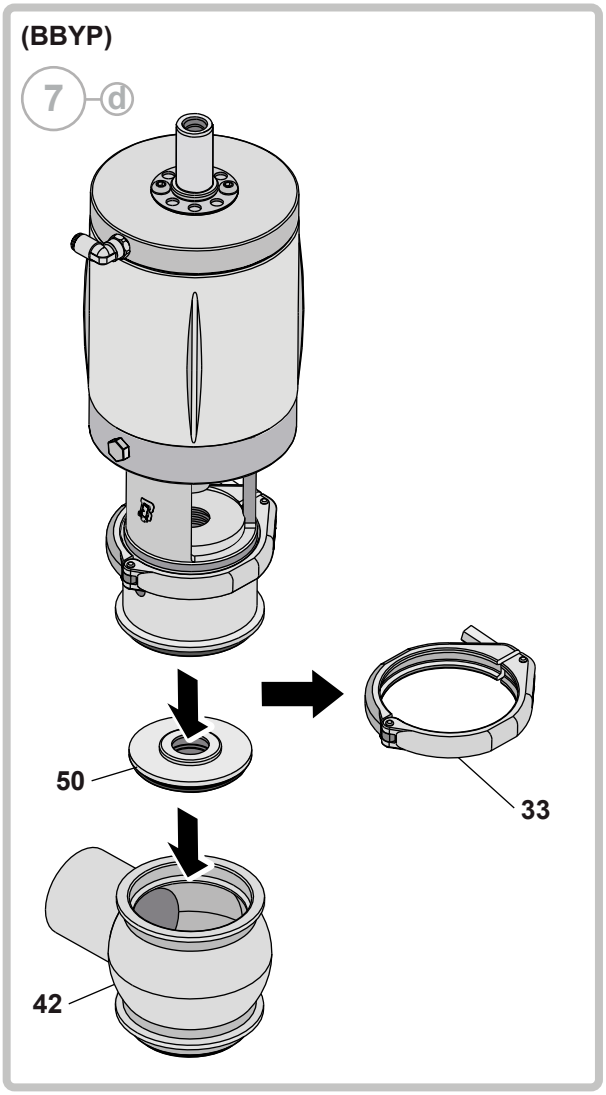
(BBYP)
7 d
50
33
42

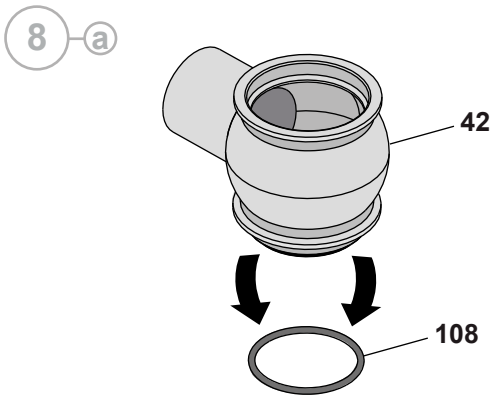
8 a
42
108

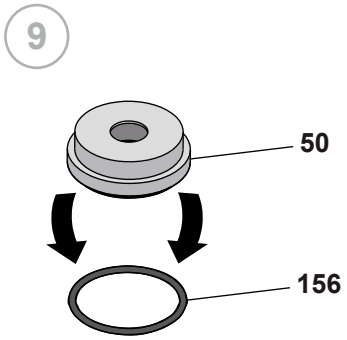
9
50
156

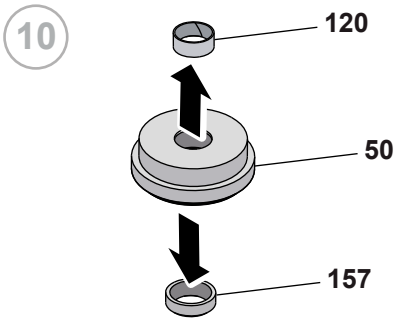
10
120
50
157

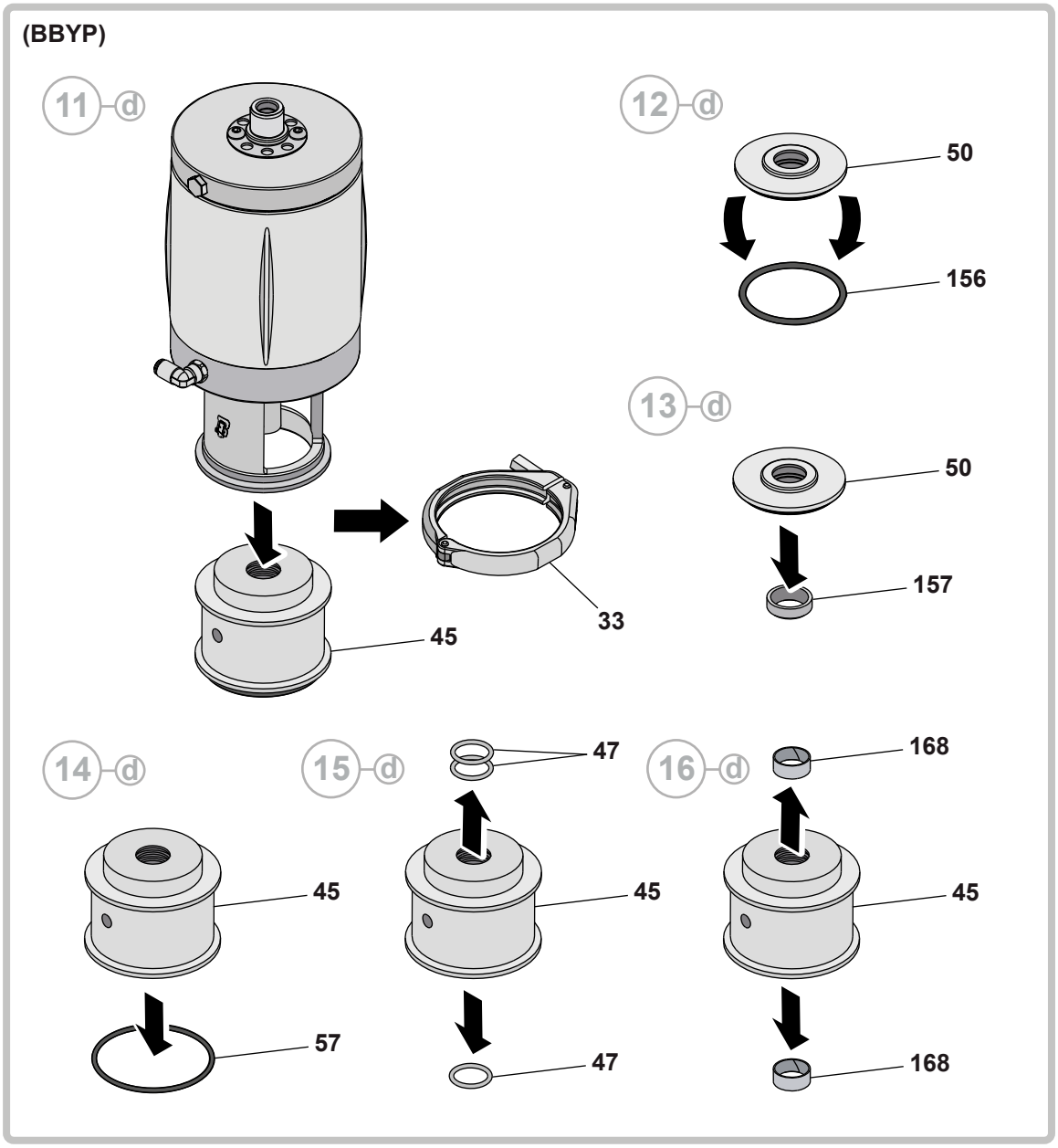
(BBYP)
11 d
45
33
12 d
50
156
13 d
50
157
14 d
45
57
15 d
47
45
47
16 d
168
45
168

17

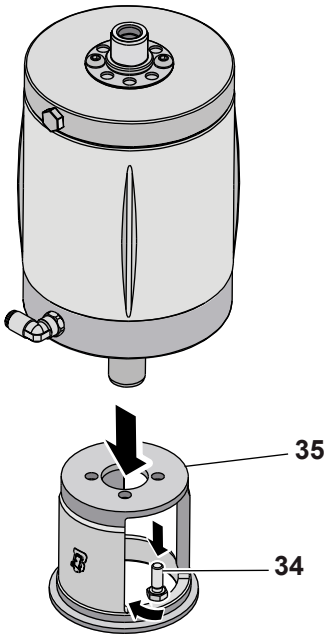

18

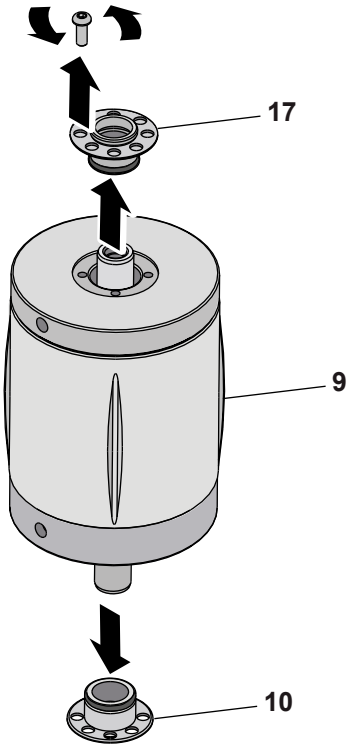

19

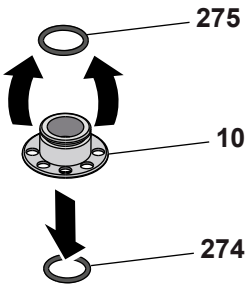

20

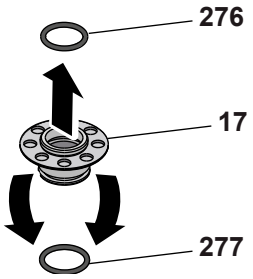

10.11 BBZP - BBZT - BBYP diverter assembly

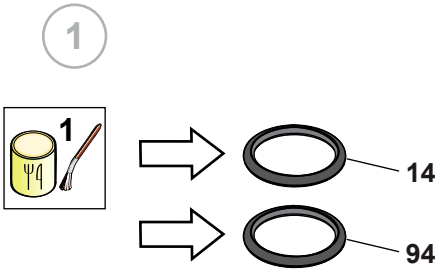

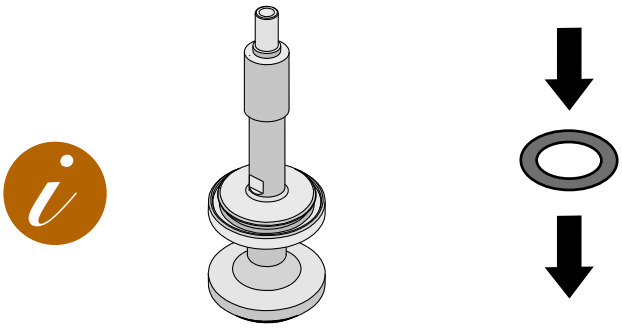

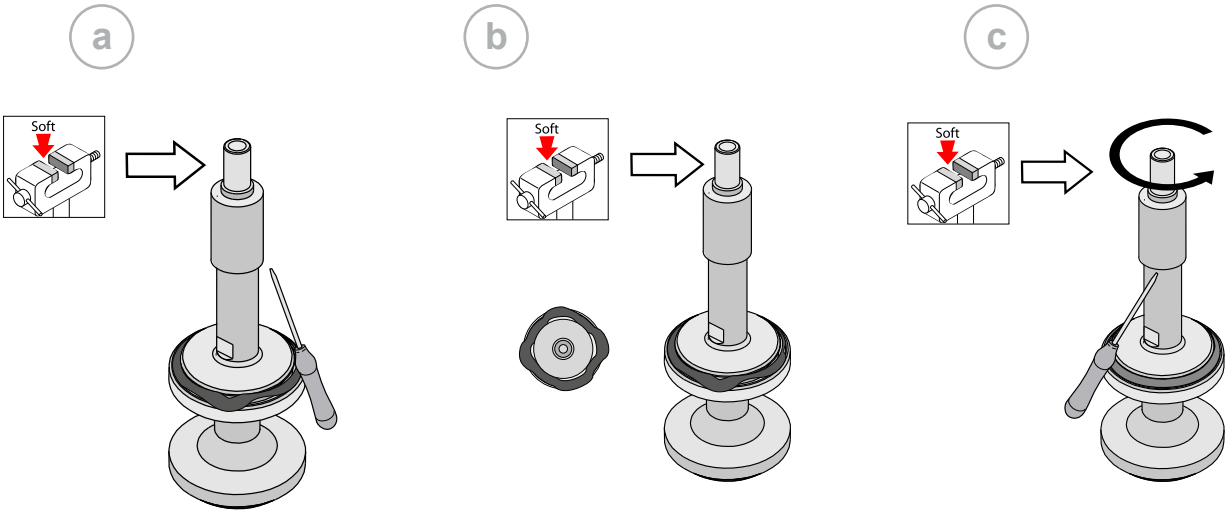

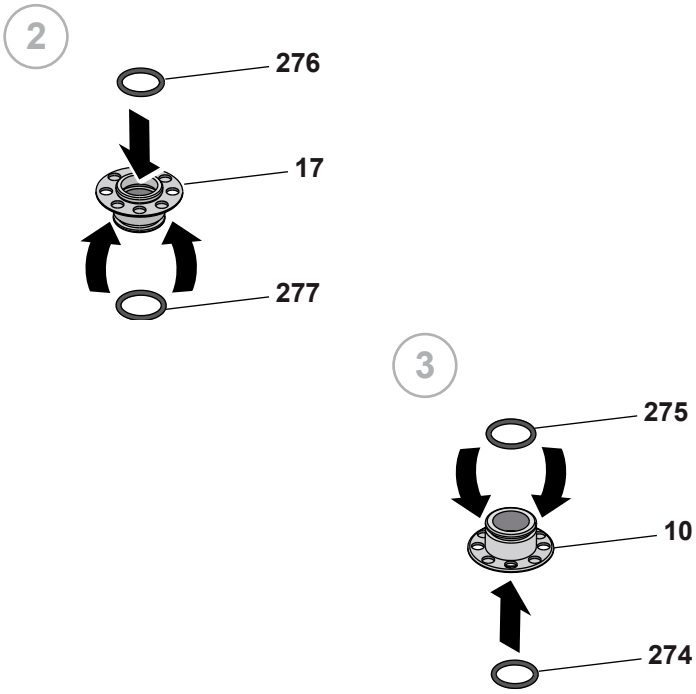
2
276
17
277
3
275
10
274

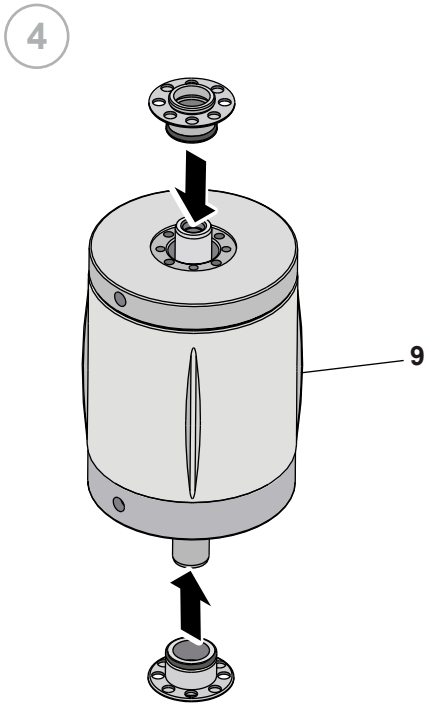
4
9

5

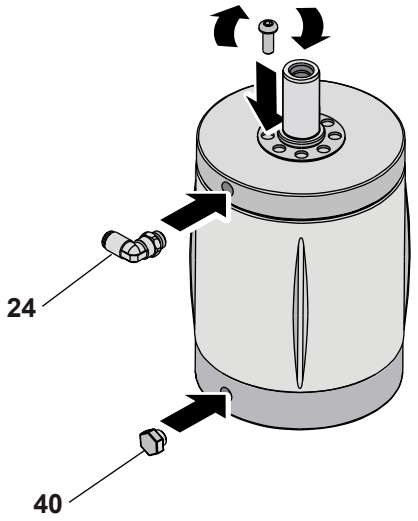

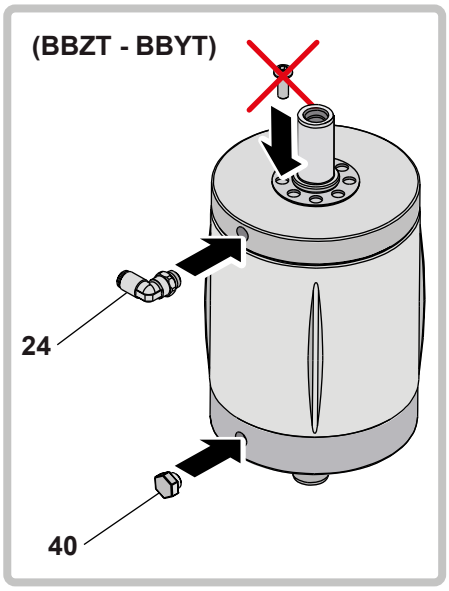

6

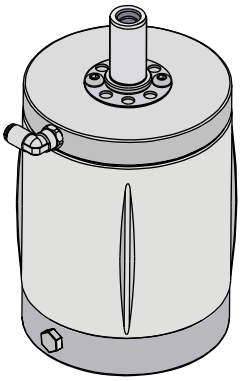

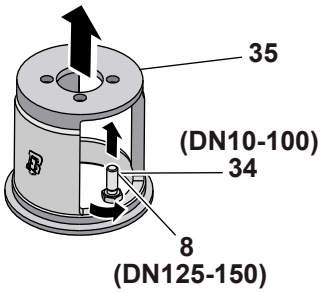

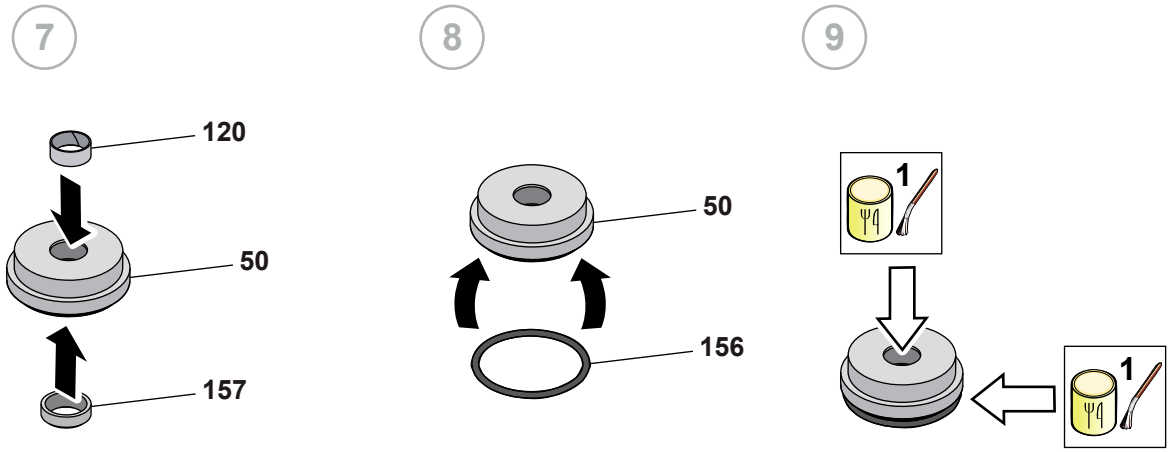

(BBYP)

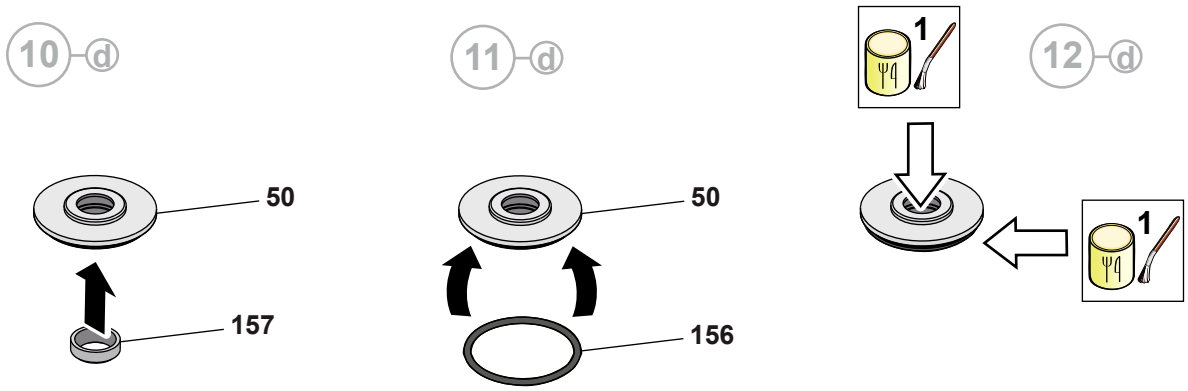

(BBYP)

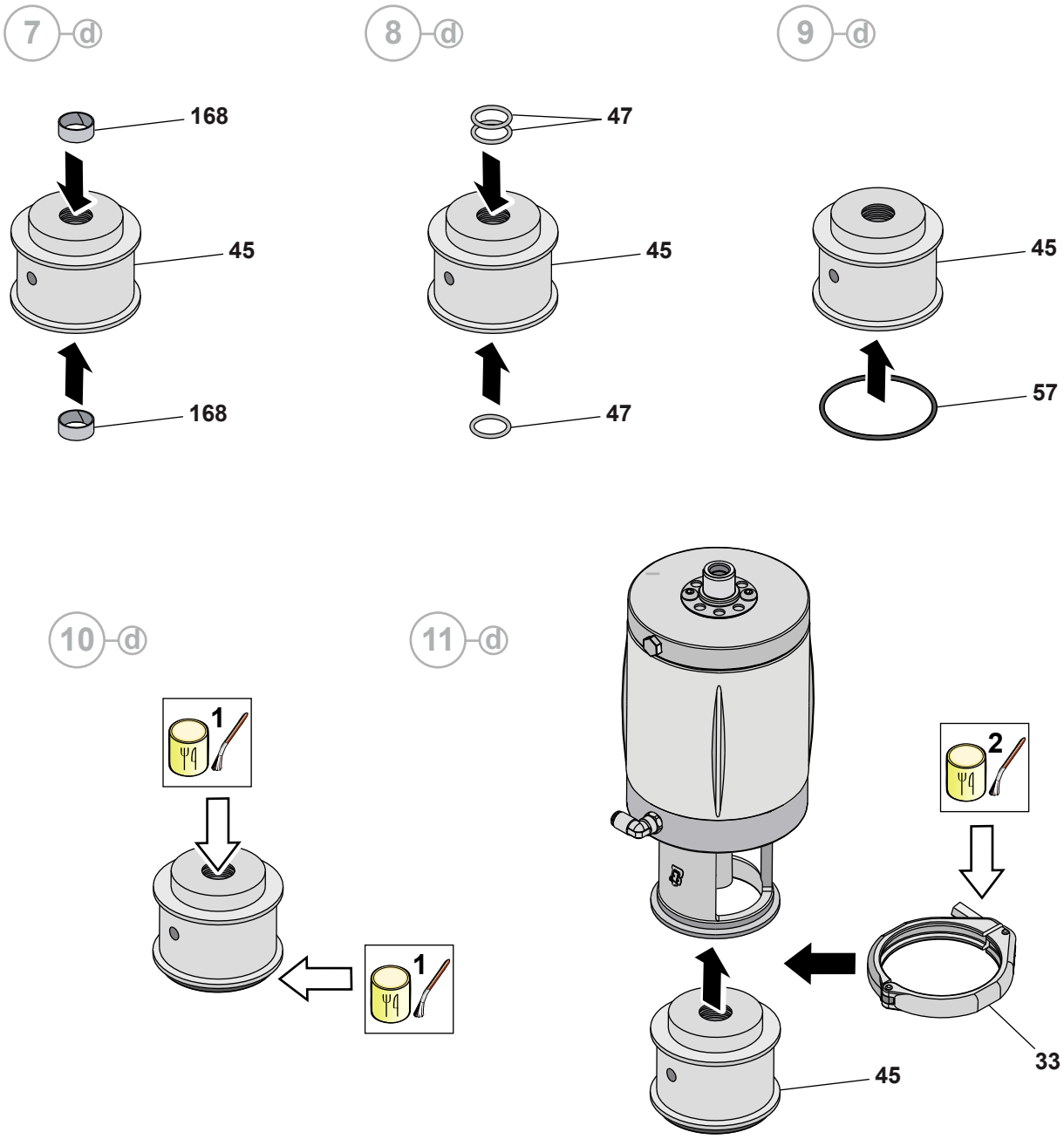

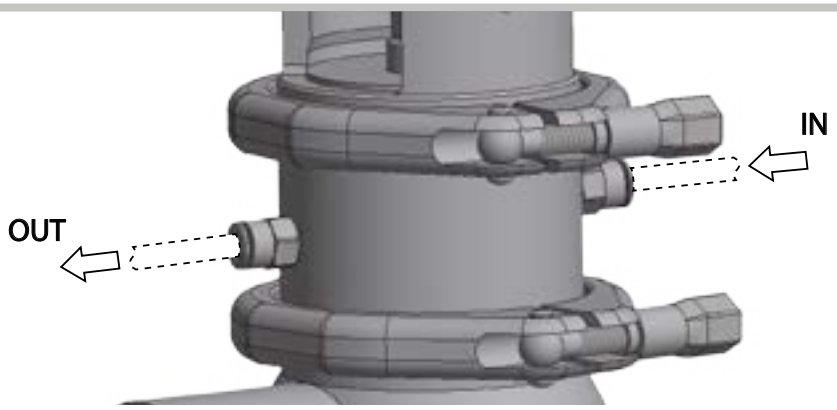

13-a

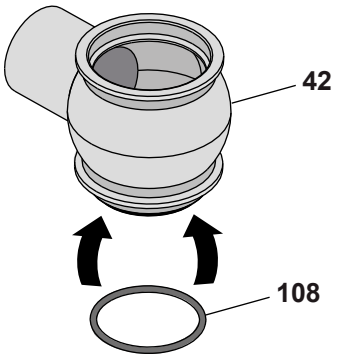

14-a

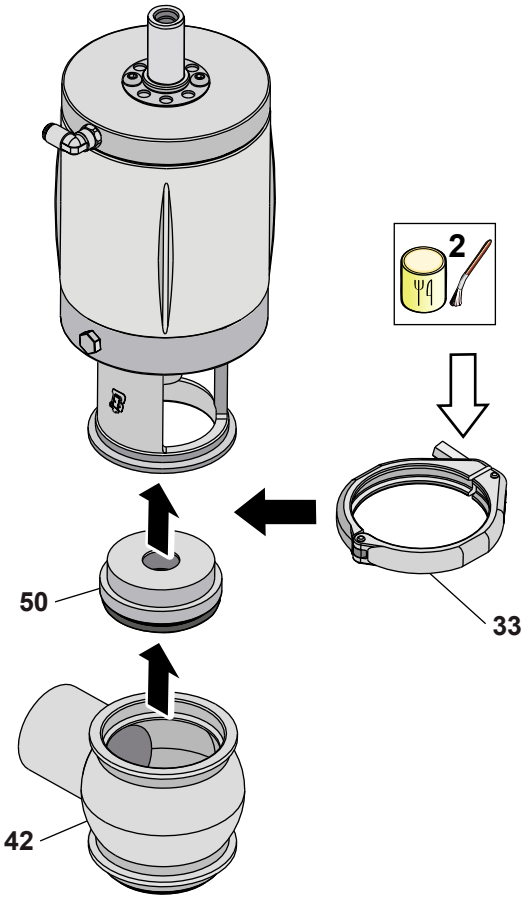

14-d

(BBYP)

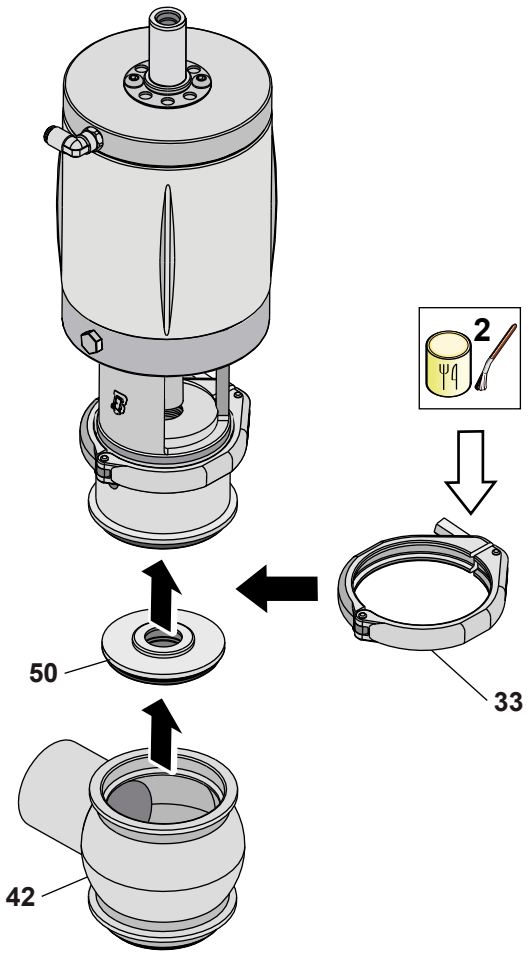

15 a

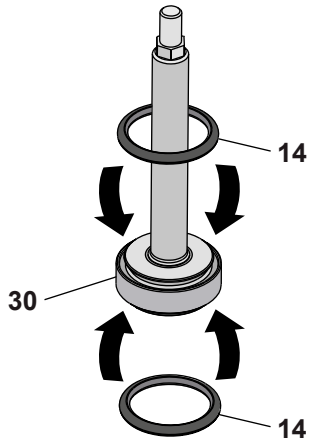

(P.T.F.E.)

15 e

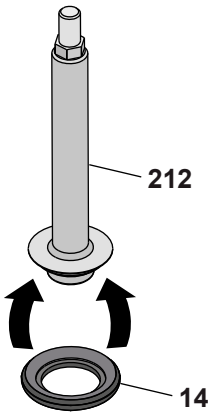

16 e

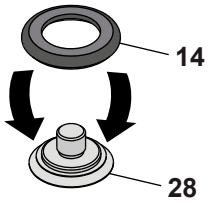

17 e

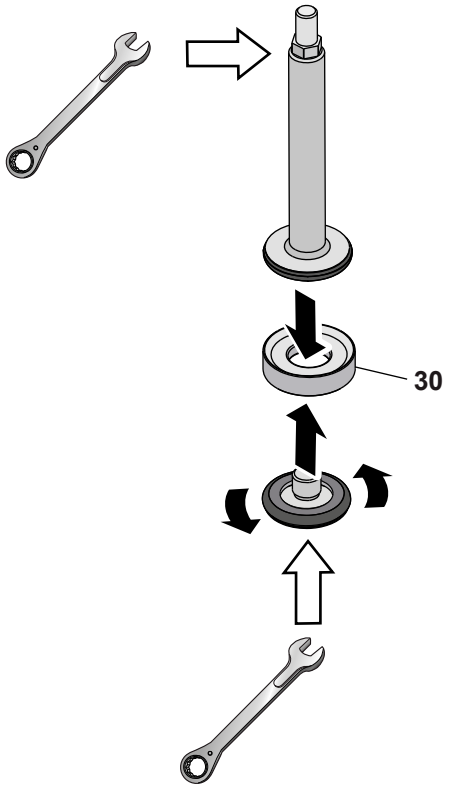

(Normally open)

18

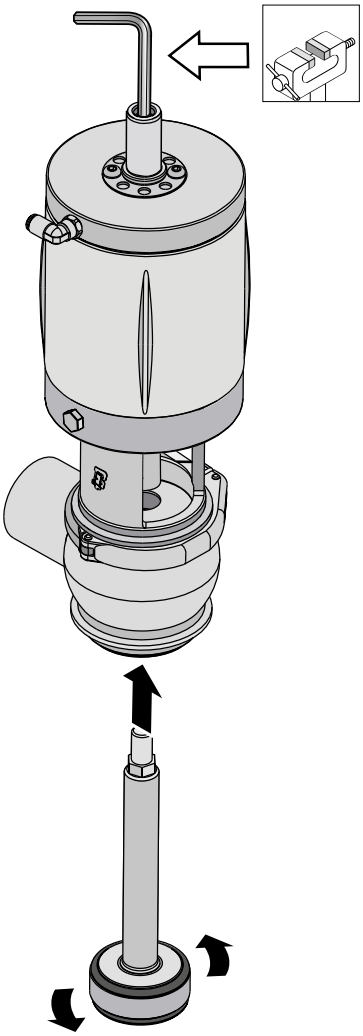

19

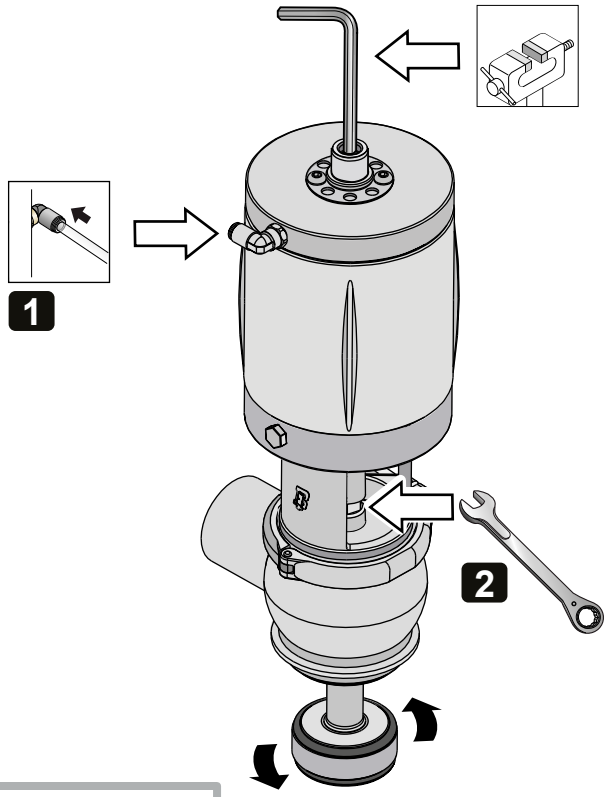

Never touch moving parts if the actuator is supplied with compressed air.

20

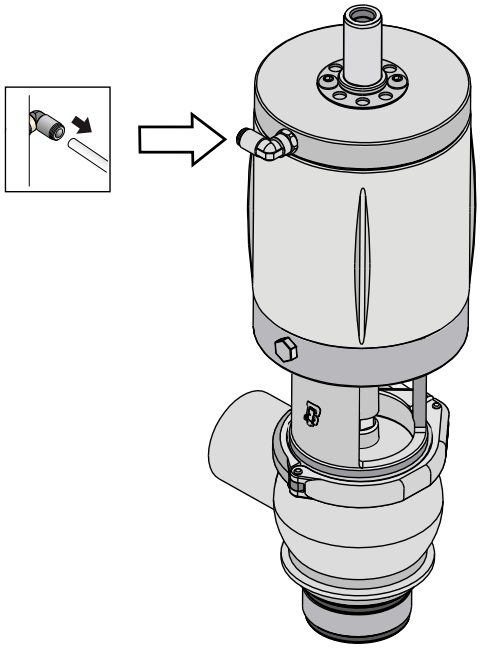

21

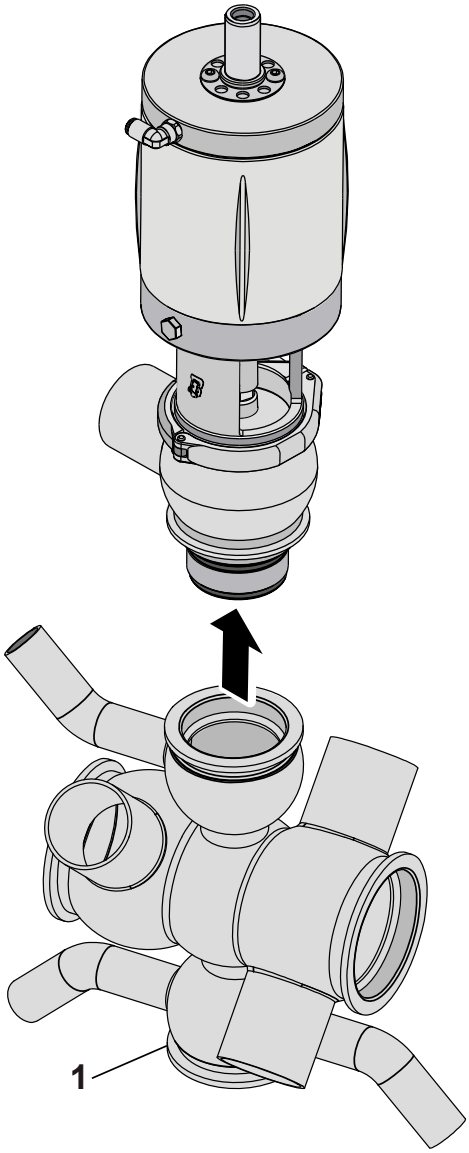

22

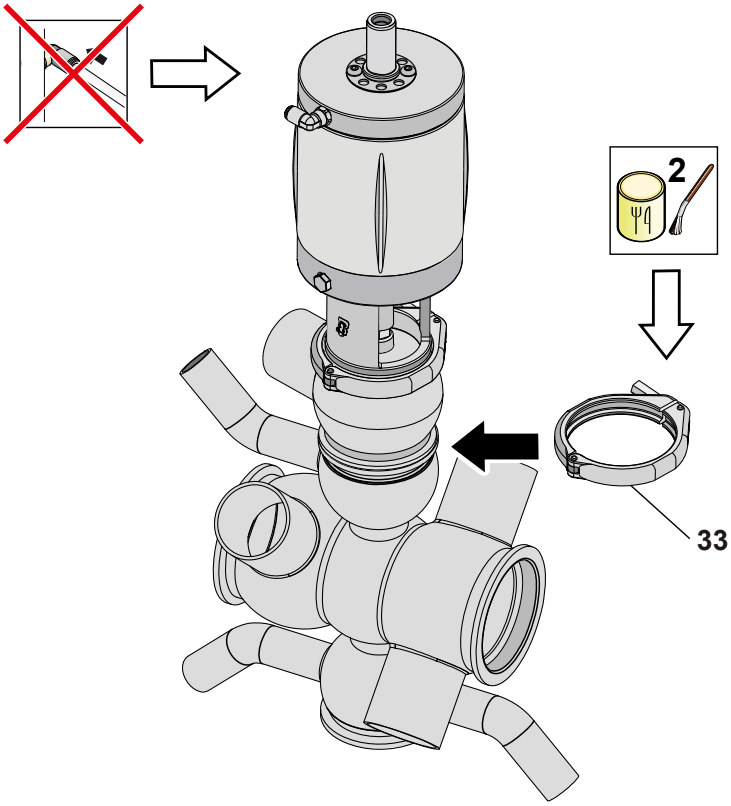

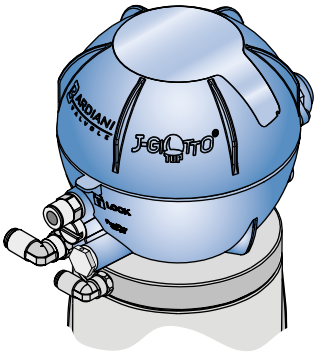

[GIOTTO]

10.12 Pneumatic valves BBZT

NO.	DESCRIPTION
23	Upper pin
24	Air connector
66	Piston
88	Grub screw
99	Cylinder
129	Pin
169	Sealing ring
170	Screw
171	Sealing ring
172	Sealing ring
173	Buffer
175	Bush
177	Elastic wire
204	Bush

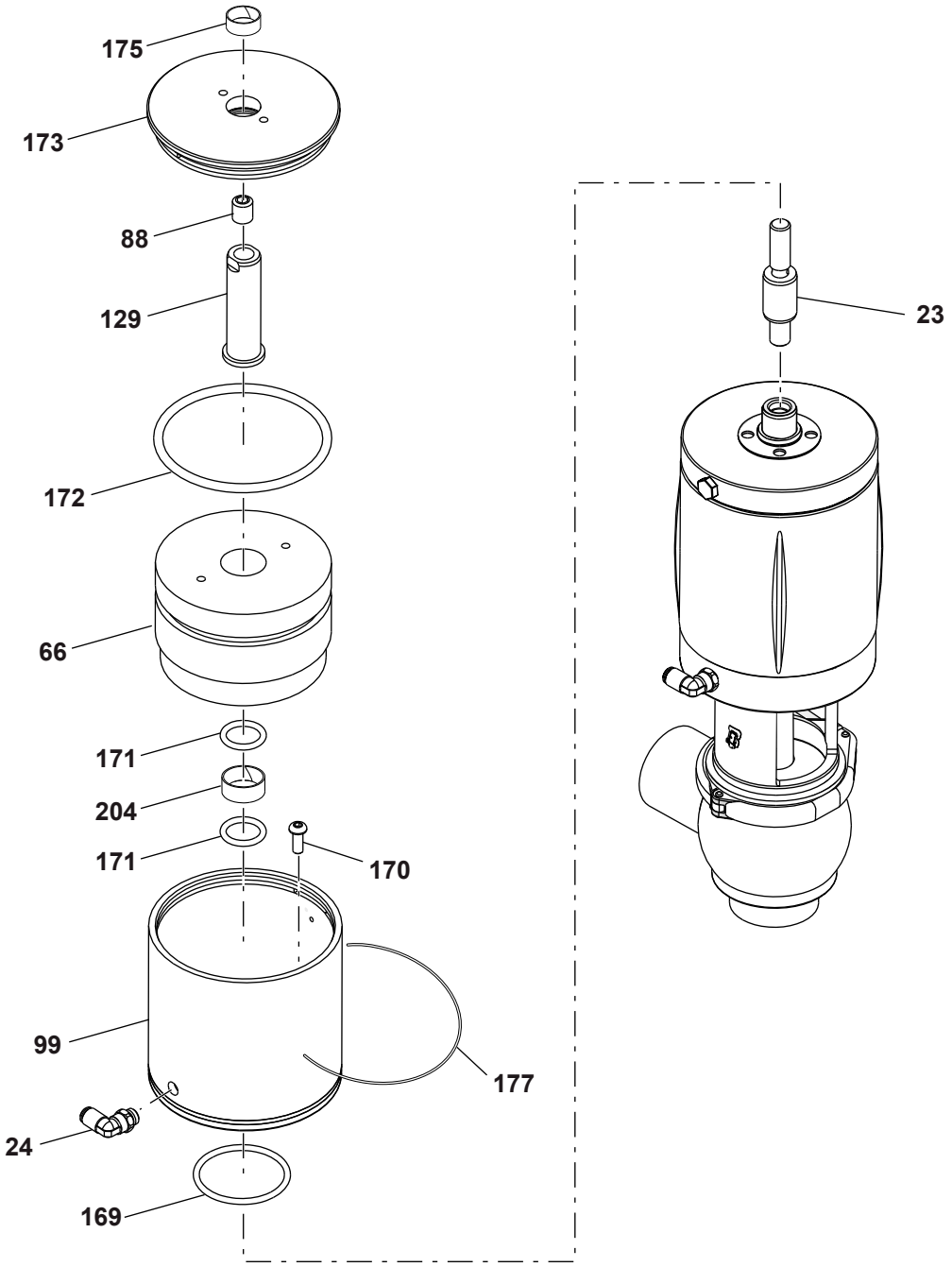
175
173
88
129
172
66
171
204
171
170
99
177
24
169
23

10.13 BBZT disassembly

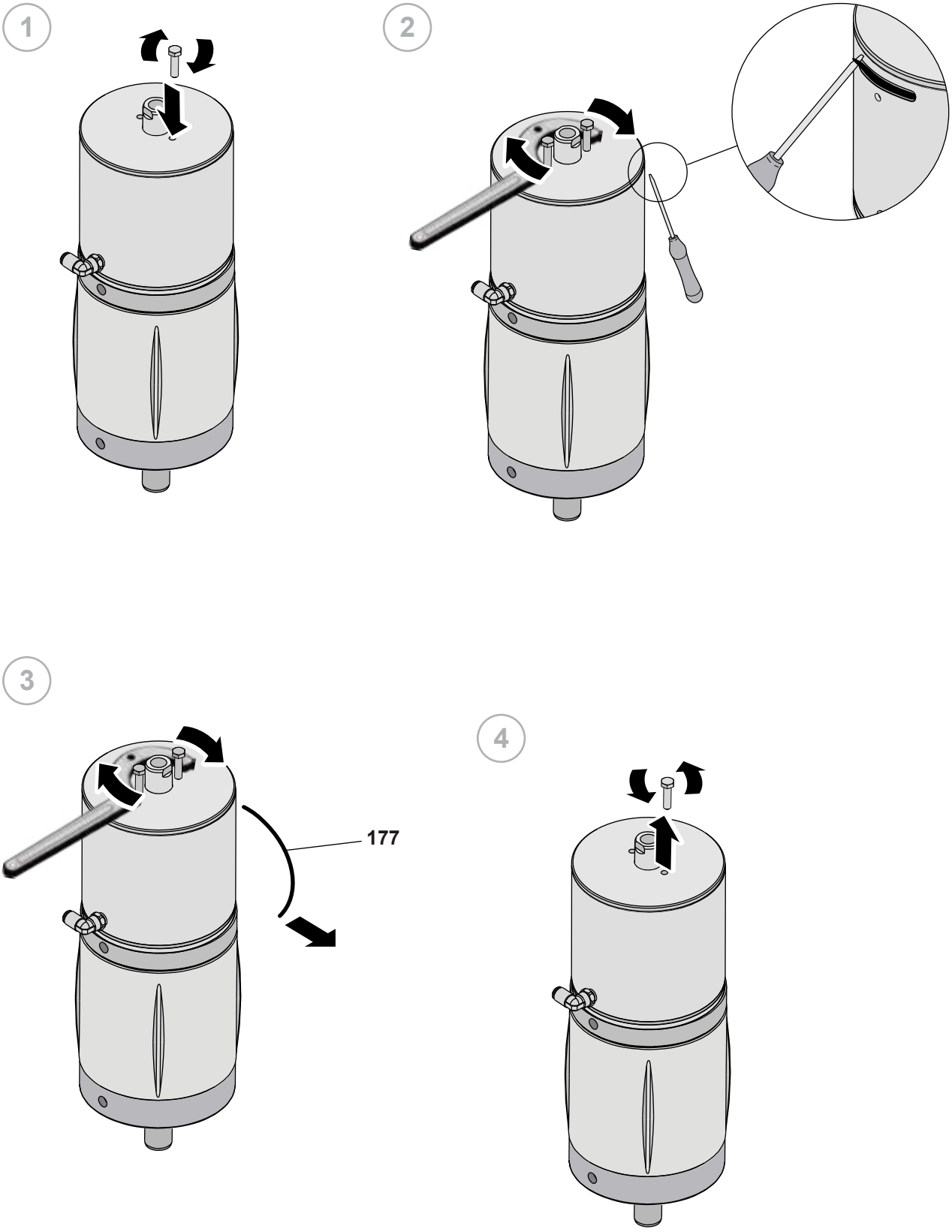

5

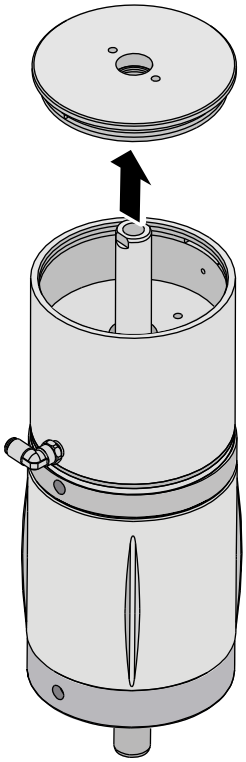

6

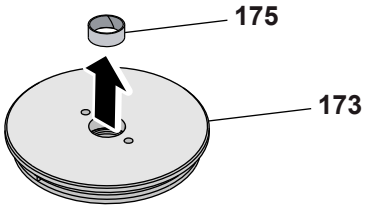

7

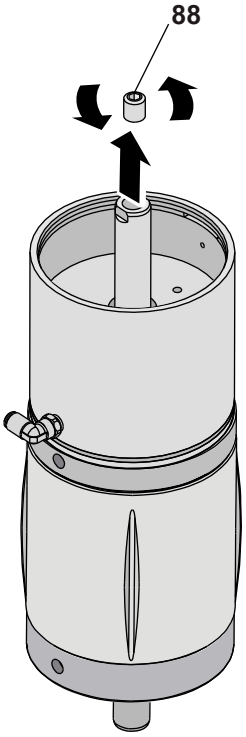

8

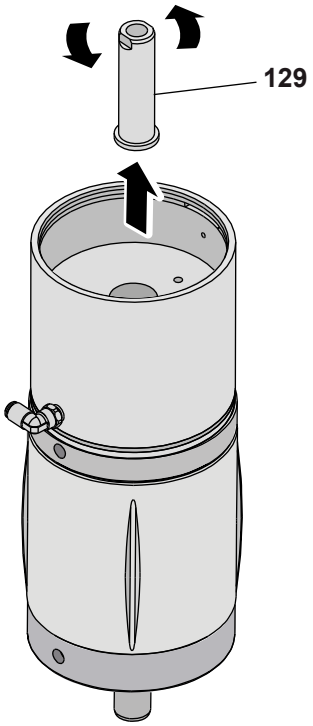

9

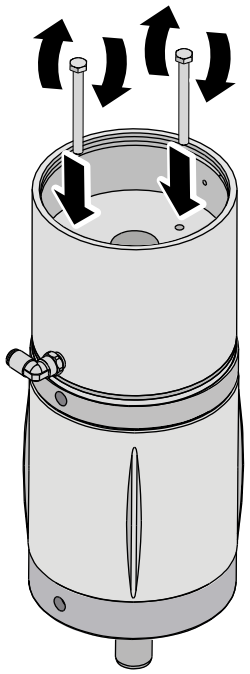

10

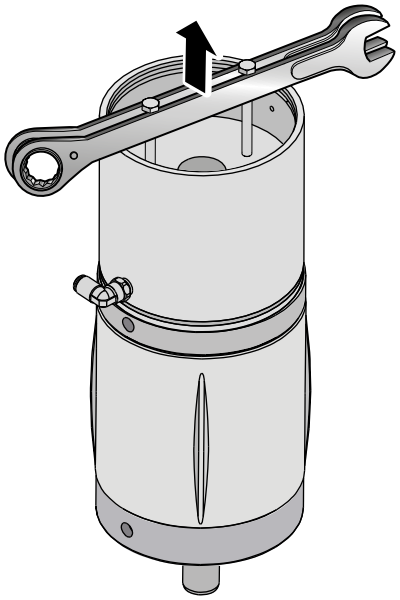

11

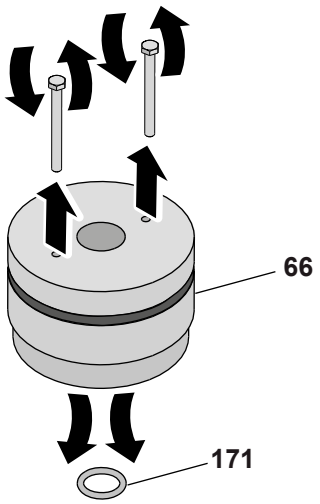

12

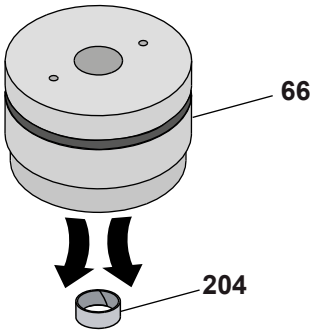

13

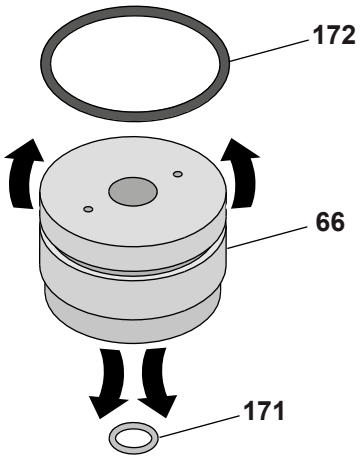

14

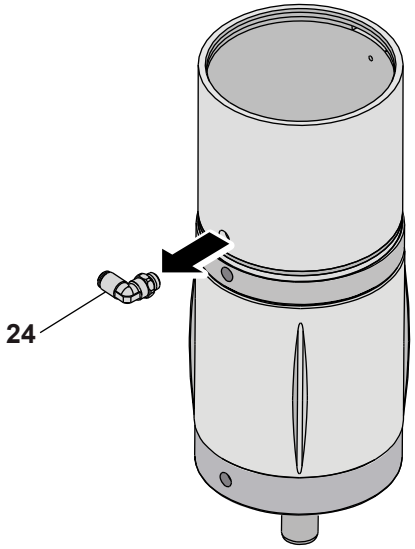

15

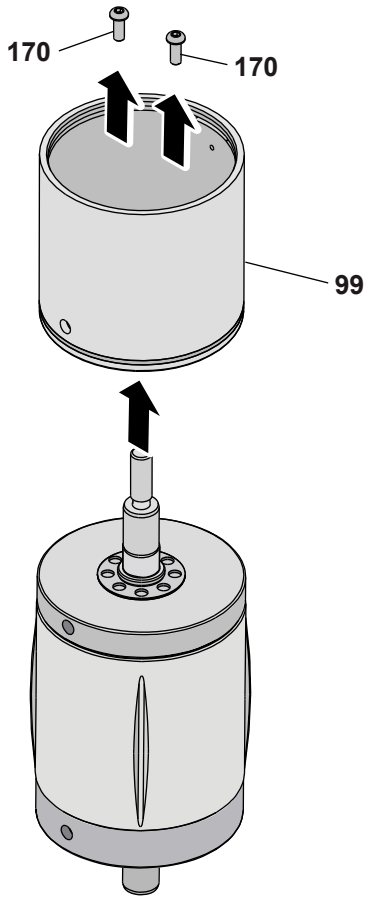

16

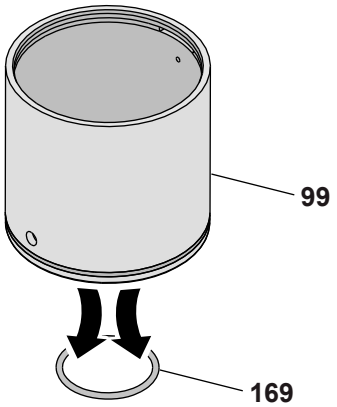

17

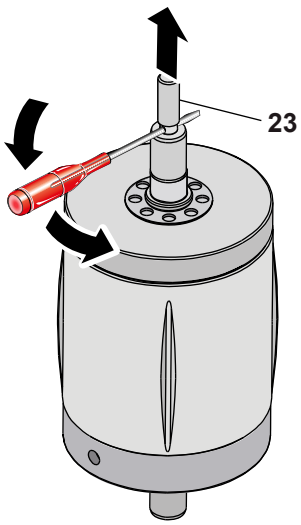

10.14 BBZT- BBWT1 assembly

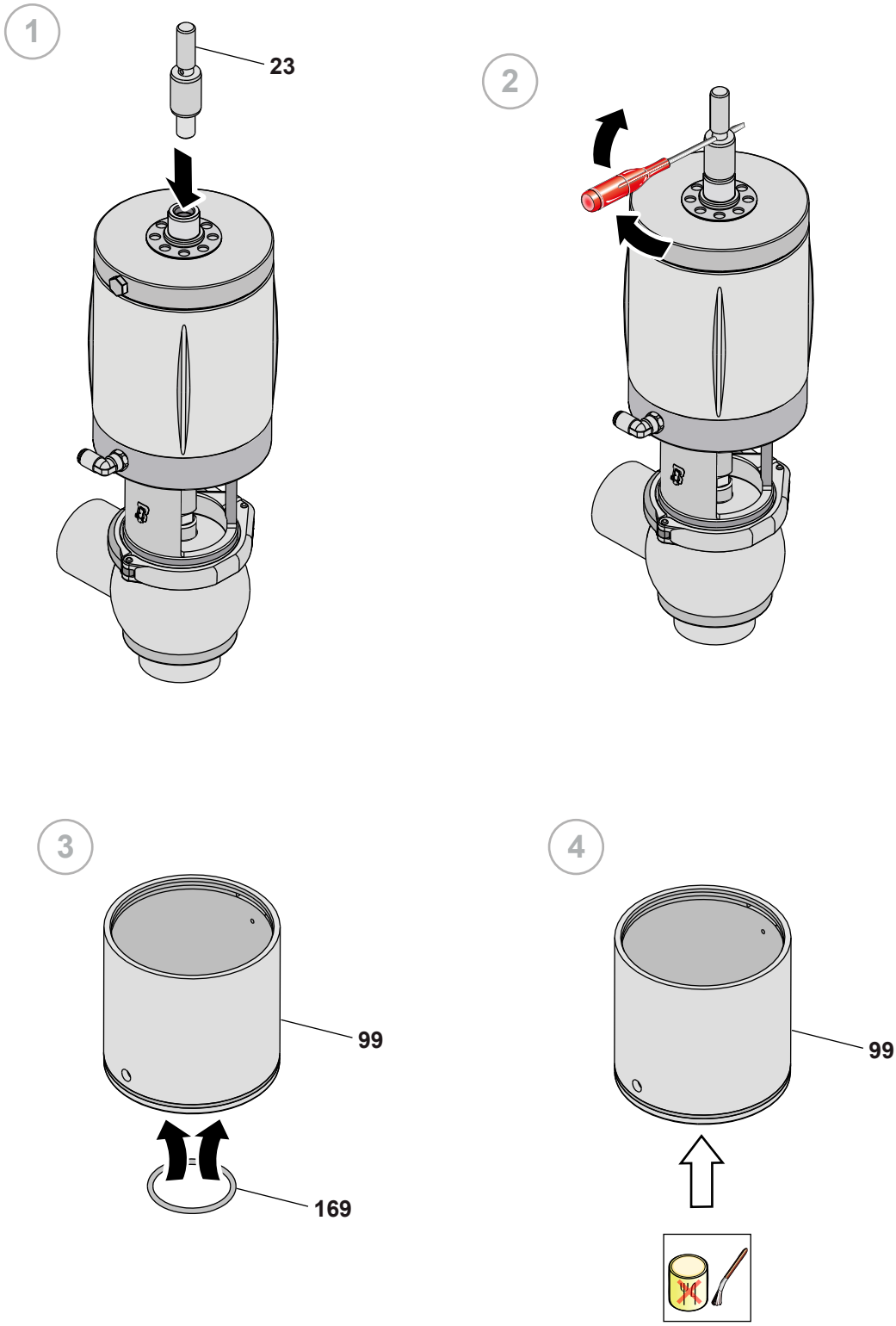

5

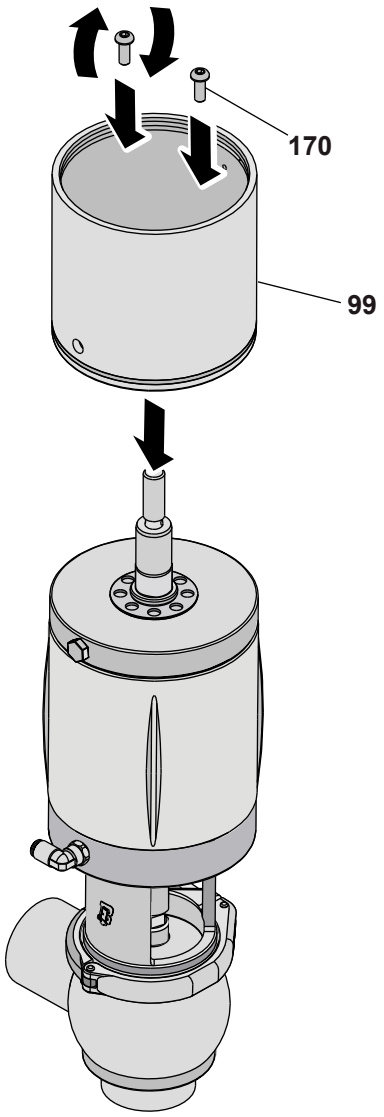

6

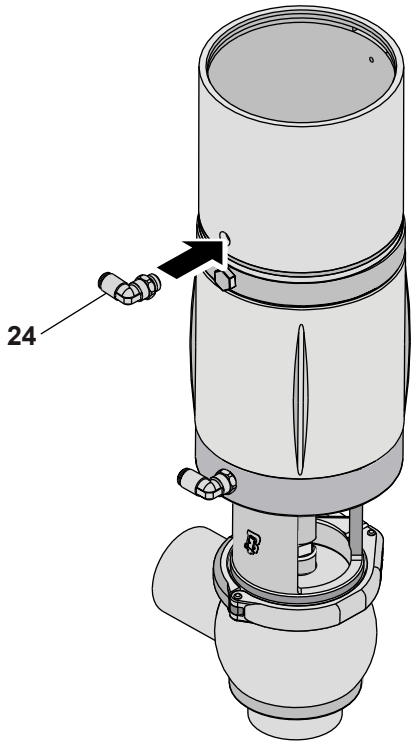

7

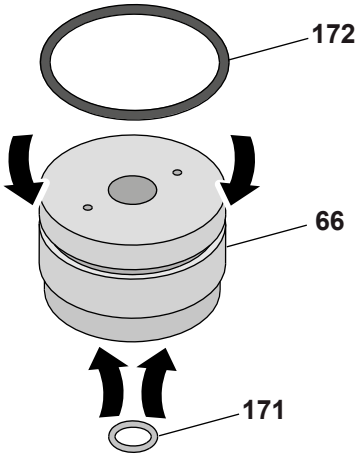

8

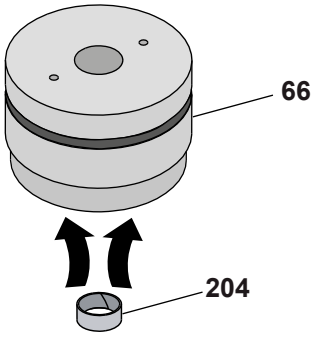

9

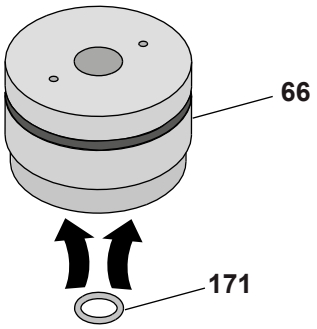

10

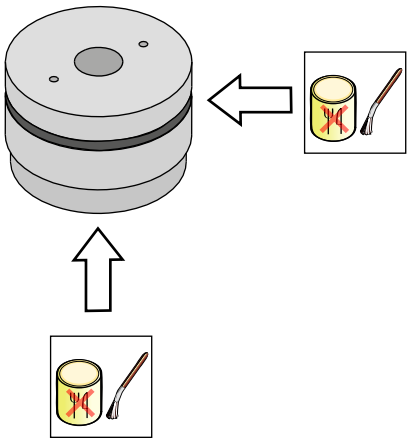

11

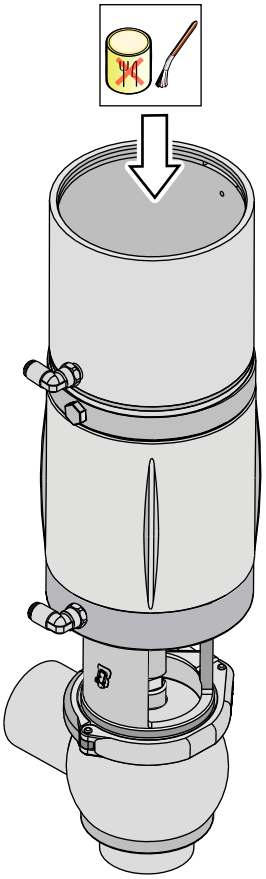

12

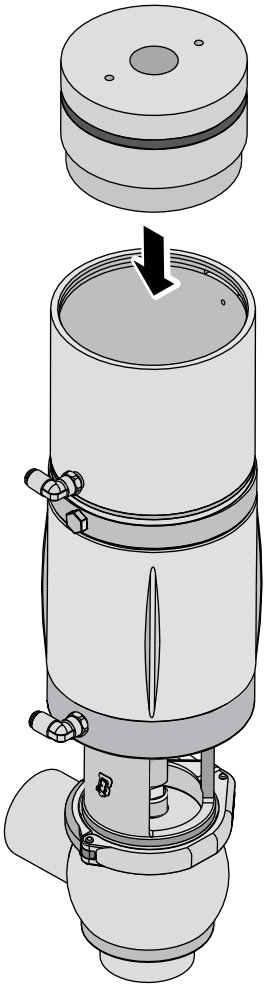

13

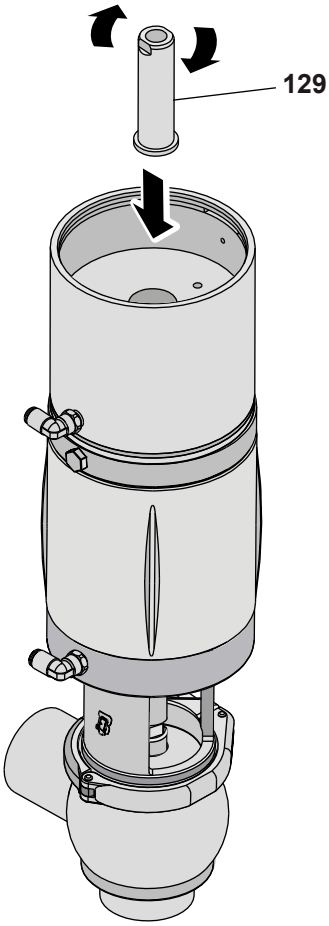

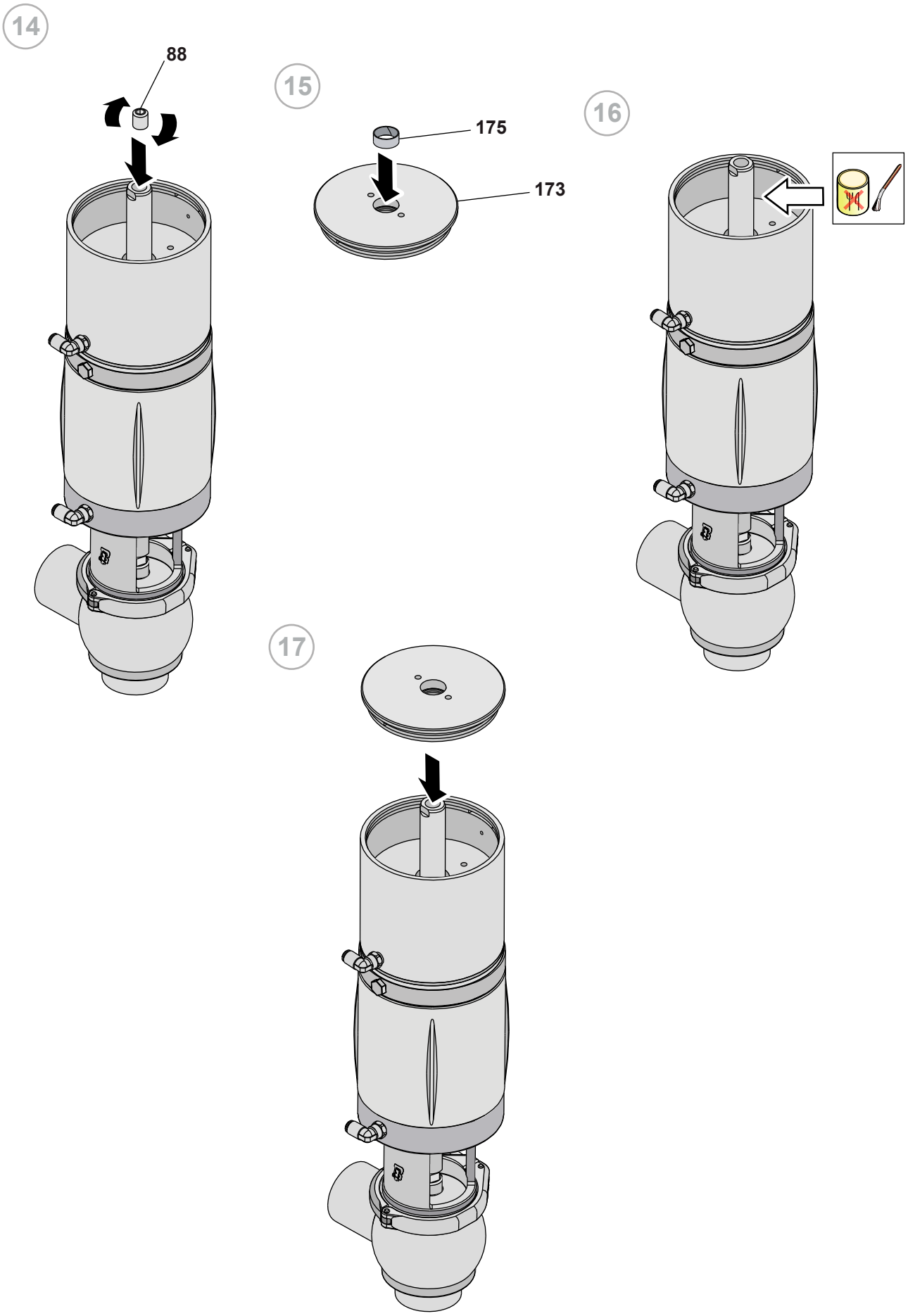
14
88
15
175
173
16
17

18

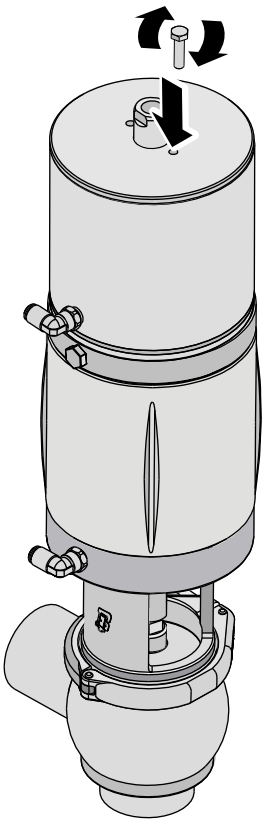

19

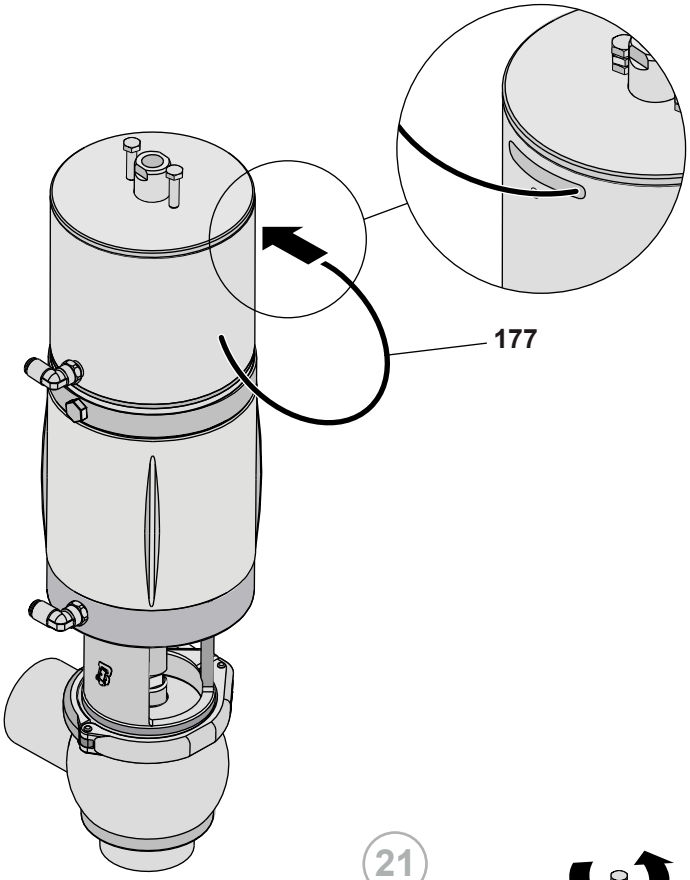

20

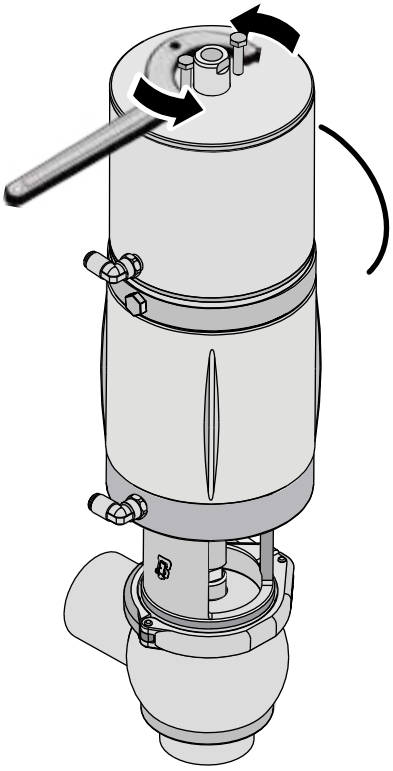

21

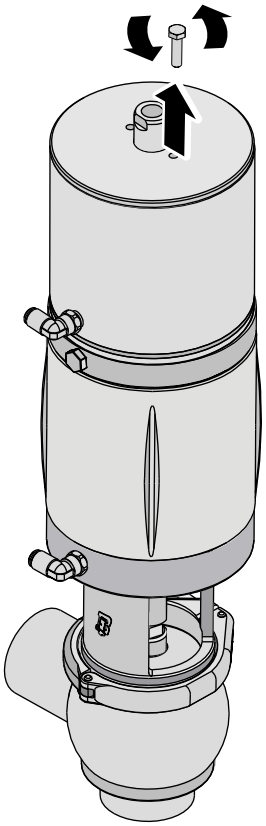

22

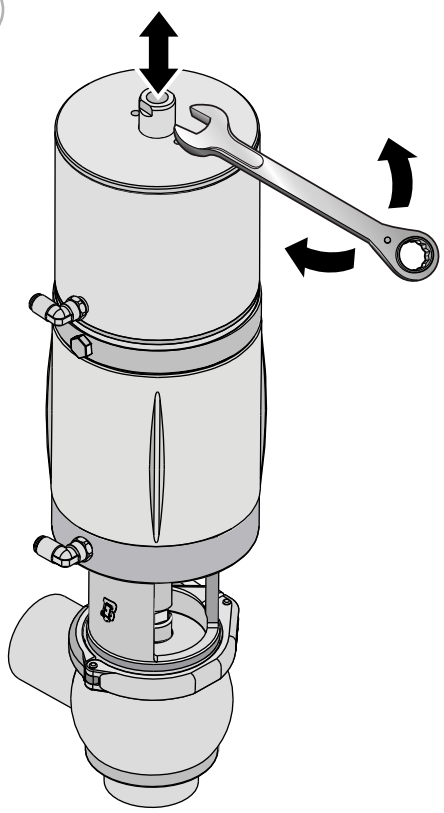

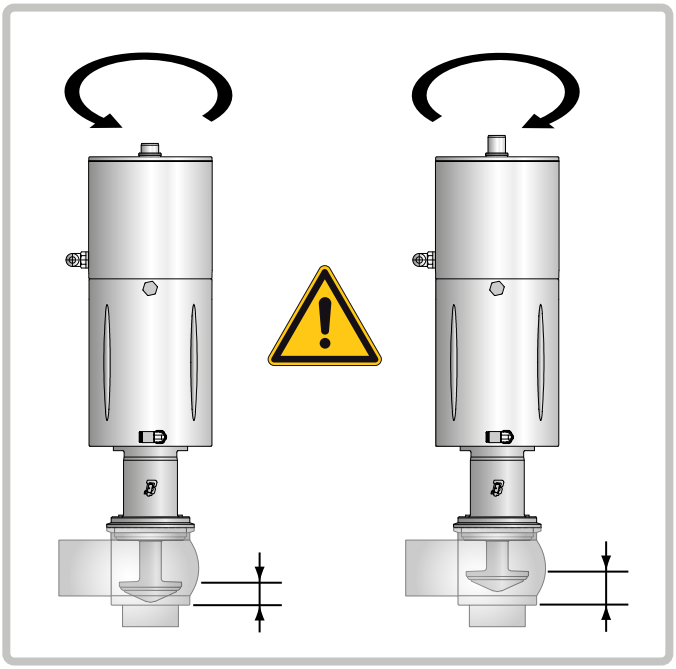

23

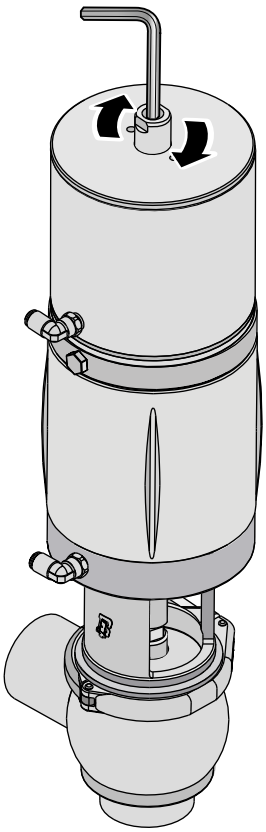

[BZZYP]

19

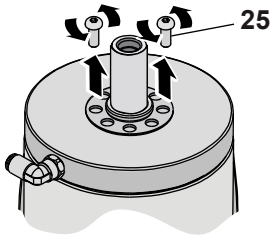

20

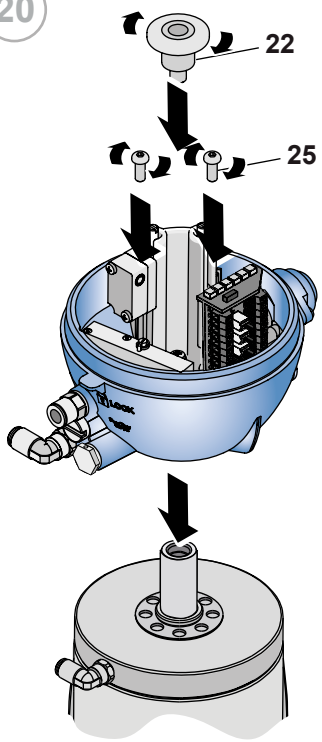

21

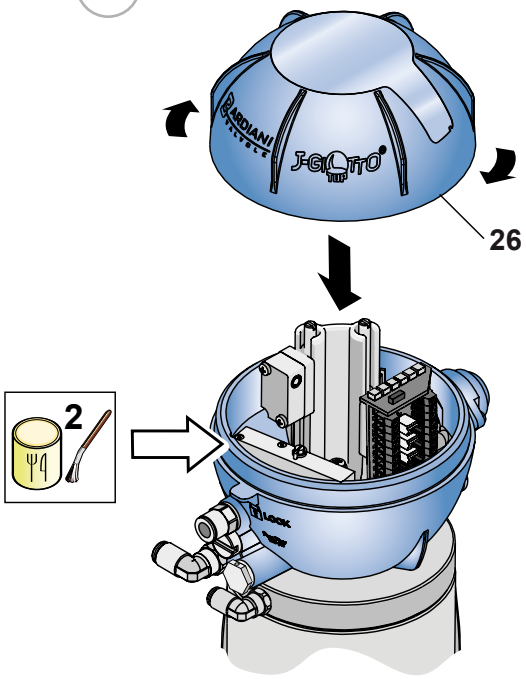

22

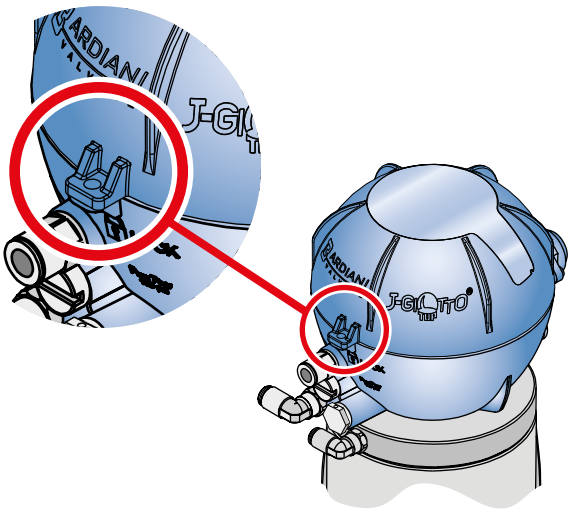

[BZZYP]

11 Annexes

EC Declaration of Conformity

EC DECLARATION OF CONFORMITY OF THE MACHINERY

(EC) 2006/42, Annex. II, p. 1 A

BARDIANI VALVOLE S.p.A.
Via G. di Vittorio 50/52 – 43045 Fornovo di Taro (Pr) – Italia

Declares
under its own responsibility that the machine:

Type:	**Pneumatic valve**
Model:	##########
Serial number:	###############
Function:	**Fluid handling**
Year of construction:	####
Reference	######

complies with all relevant provisions of the following EC directive:
(EC) 2006/42 MACHINERY
and also comply with the following EC Directives and Regulations:
(EU) 2014/30 ELECTROMAGNETIC COMPATIBILITY DIRECTIVE (EMC)
(EC) 2023/2006 and subsequent amendments and additions with regard on good manufacturing practices of materials and articles intended to come into contact with food
and the following harmonized standards, rules and / or technical specifications applied:
EN ISO 12100:2010
REGULATION (EC) 1935/2004 and subsequent amendments and additions with regard to steel and elastomers in contact with the product

Fornovo di Taro
##.##.####

Legal Representativei

BARDIANI VALVOLE S.p.A.
Via G. di Vittorio 50/52
43045 Fornovo di Taro (Pr) ITALY
Reg. Impr. Parma, C.F.- P.I.V.A. n. 01511810341
R.E.A. Parma n. 159144 • Cap. Soc. € 1.186.800 i.v.

DRAFT

15 BBWT1 2D diagram

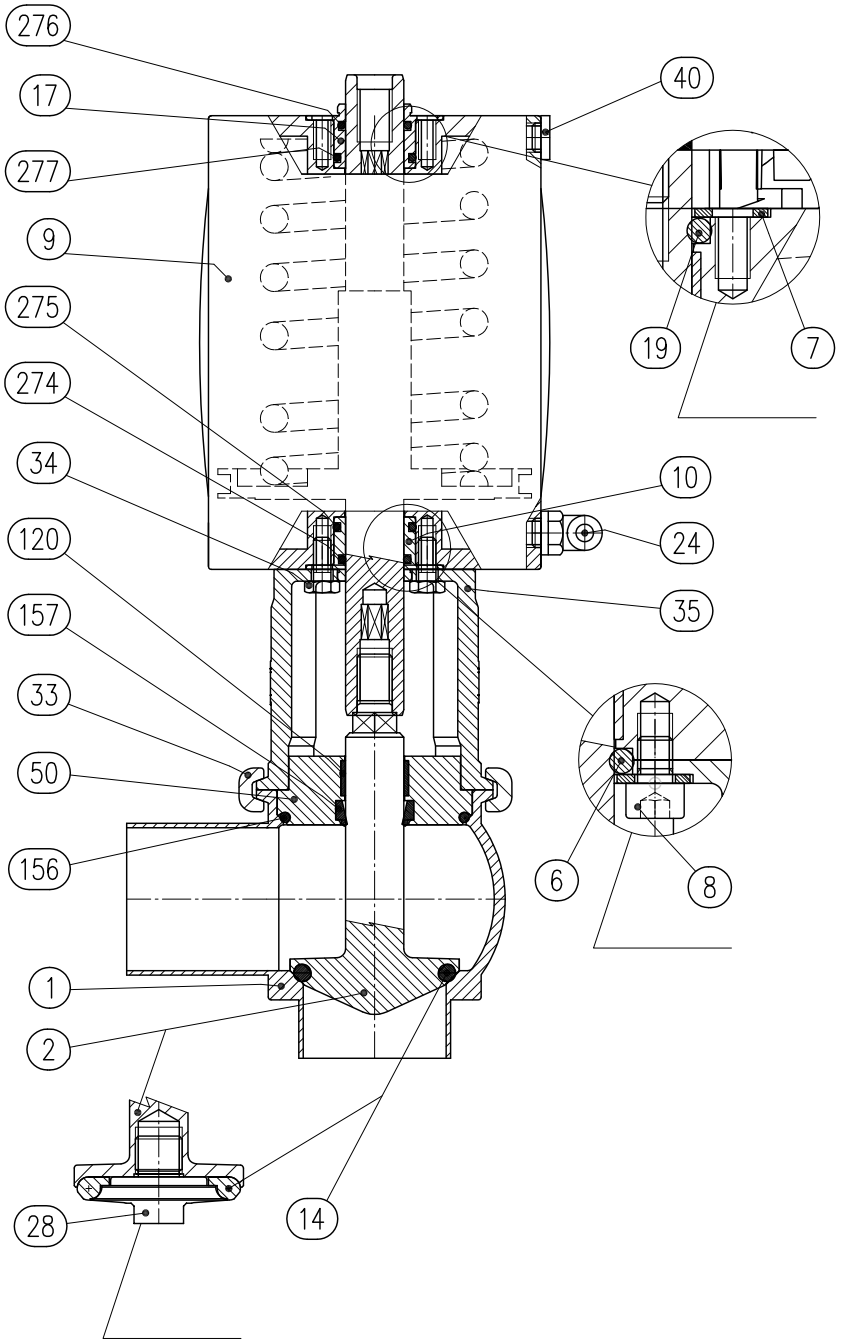

[BBYP L]

16 BBZP Diverter 2D diagram

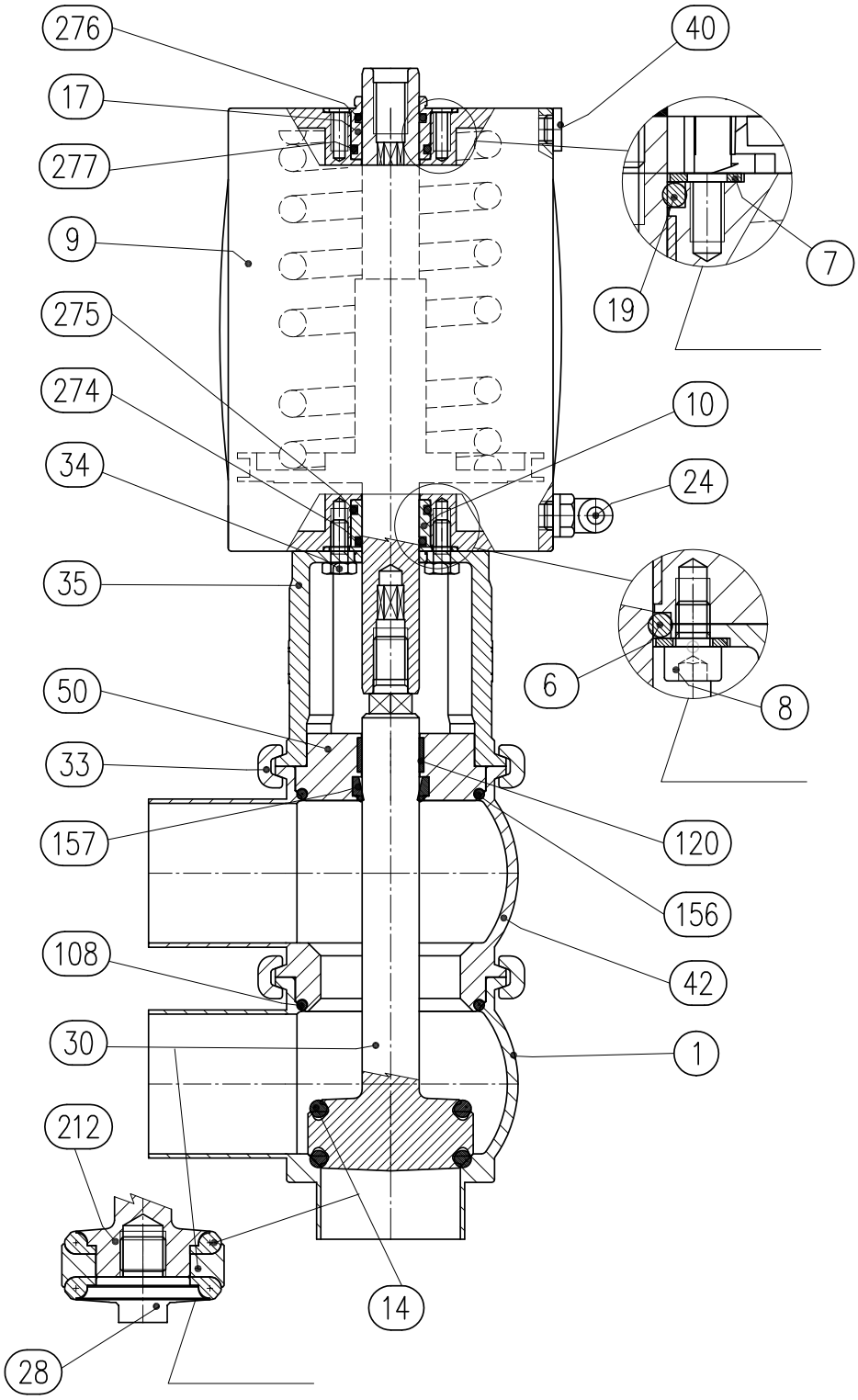

[BBYP-LL]

17 BBYP 2D diagram

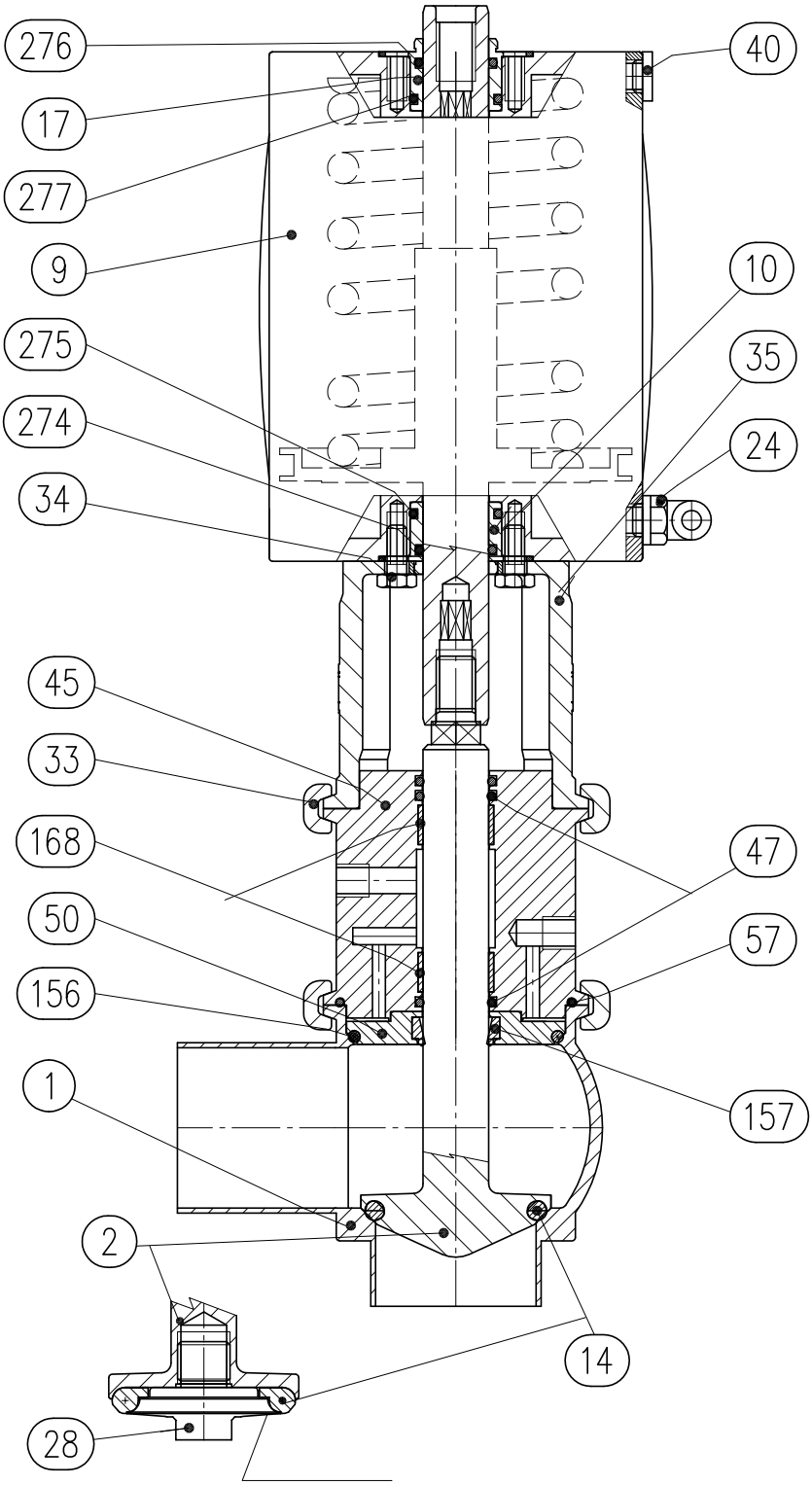

[BBYP L]

18 BBYT 2D diagram

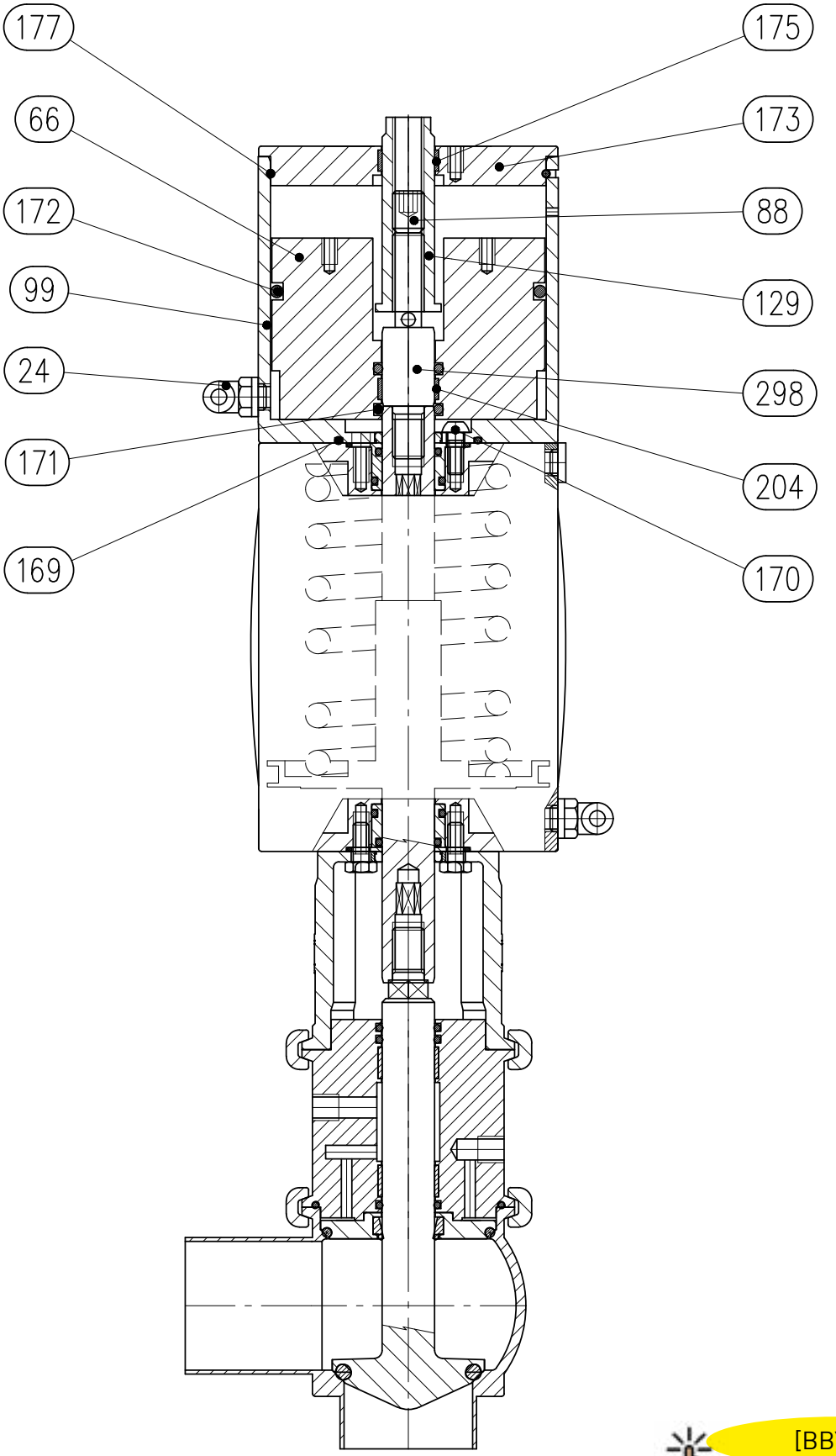

[BBYP L]

19 BBYT 2D diagram diverter

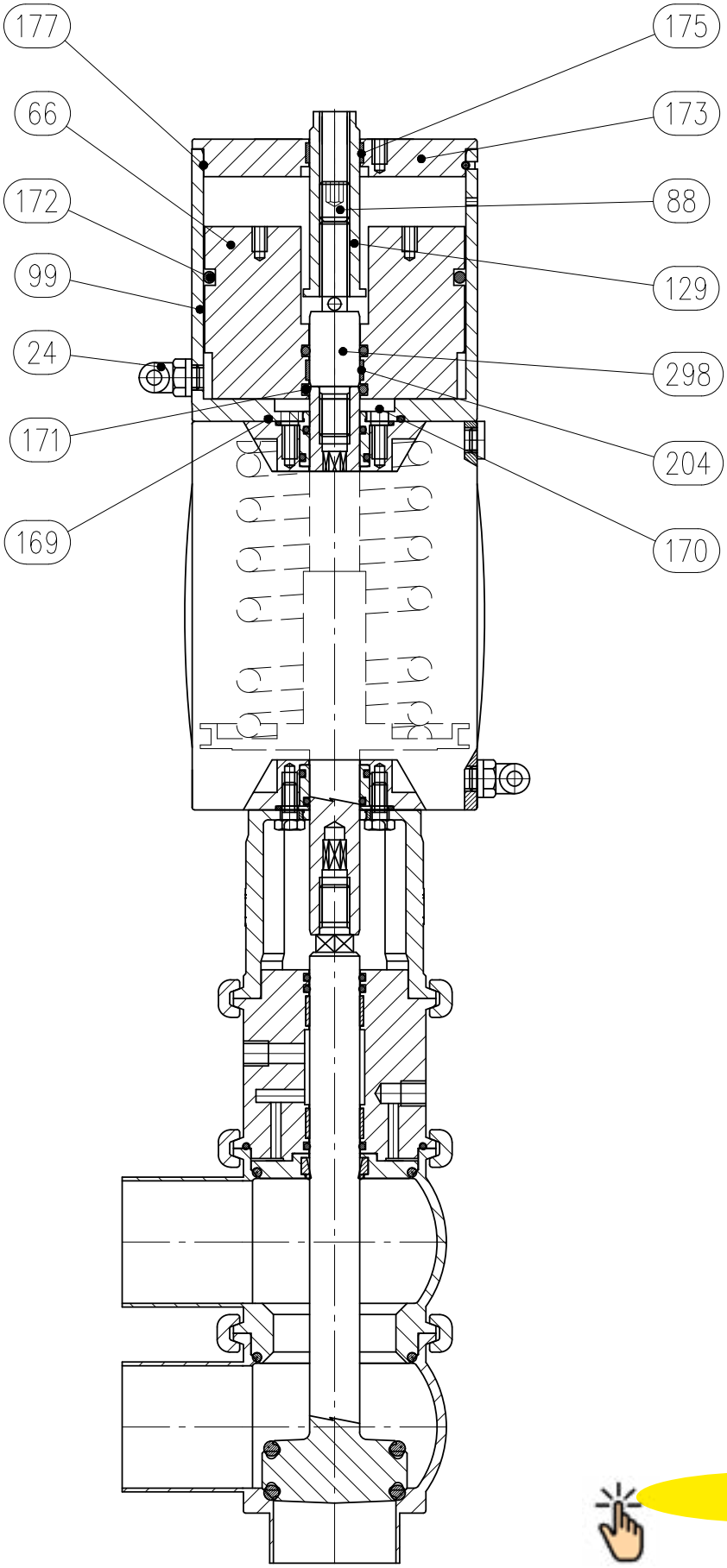

[BBYP L]

20 Warranty

1. VALIDITY

Bardiani Valvole's Products are manufactured in compliance with the technical specifications laid out in their "Instruction, Use and Maintenance Manual" and are fully compliant with the directives specifically mentioned in these manuals.
Bardiani Valvole S.p.A. guarantees its own products against any design and/or construction and/or material defects and/or faults for a period of 12 (twelve) months from the date of delivery.
Notification of any Product defects and/or faults must be sent in writing to Bardiani Valvole S.p.A. within 8 (eight) days from their detection, providing adequate documentation of the defect/fault encountered as evidence.
Services provided in the warranty period shall not result in an extension of the warranty beyond the stipulated 12 (twelve) month period, as this warranty validity period is to be considered mandatory.

2. CONTENTS OF THE WARRANTY

Notwithstanding and without prejudice to the rights of the Buyer, which may be acknowledged by applicable law, this warranty it to be intended as limited, at the discretion of Bardiani Valvole S.p.A., to the repair and/or replacement of the Product and/or part of the Product and/or its components which is/are found to be defective due to design and/or manufacturing and/or material faults.

- In the event of repair and/or replacement of the Product and/or any one of its parts and/or components, any returned item/s shall become the property of Bardiani Valvole S.p.A and the relative shipping costs shall be at the expense of Bardiani Valvole S.p.A.
- Bardiani Valvole S.p.A., shall be under no obligation to compensate for any immaterial and/or indirect damages and shall in no way be held liable for consequential damages and/or losses, such as (by way of example only), damages due to loss of business, contracts, opportunities, time, production, profits, goodwill, image etc..
- No retailer or distributor or dealer or agent or representative or employee or person appointed by Bardiani Valvole S.p.A. is authorized to make any amendments and/or integrations and/or extensions to this warranty.

3. EXCLUSIONS FROM THE WARRANTY

Elastomers are expressly excluded from this warranty.
This warranty does not cover design faults emerging whenever a Product is manufactured by Bardiani Valvole S.p.A. based on designs and/or technical specifications provided by the Buyer.
Application of this warranty also excludes:

- faults and/or defects resulting from incorrect and/or unsuitable and/or improper transport fo the Product,
- faults and/or defects resulting from installation of the Product which fails to observe the indications provided in the "Instruction, Use and Maintenance Manual" or in any case caused by incorrect and/or unsuitable and/or improper installation,
- faults and/or defects resulting from use and/or maintenance operations and/or storage of the Products which fail to observe the prescriptions provided in the "Instruction, Use and Maintenance Manual" or in any case which are incorrect and/or unsuitable and/or improper;
- faults and/or defects in the Product and/or its parts and/or its components;
- faults and/or defects in the Product and/or its parts and/or its components for work and/or repairs being carried out by unskilled staff or staff that has not been authorised by Bardiani Valvole S.p.A.;
- aults and/or defects in the Product and/or its parts and/or its components due to it/them being dropped and/or banged and/or dented and/or misused and/or tampering and/or breakage and/or accidents or in any event due to negligence and/or carelessness and/or neglect by the Buyer and in general for any causes not attributable to design and/or manufacturing and/or material defects;
- faults and/or defects in the Product and/or its parts and/or its components caused by other events outside the control of Bardiani Valvole S.p.A. or determined by force majeure or mishap.

21 Recommendations

1. Consultation of the "Instruction, Use and Maintenance Manual" is mandatory prior to the installation, use and maintenance of all Products. All the information, indications, specifications, technical details provided herein are based on test data which the Manufacturer Bardiani Valvole S.p.A. holds to be reliable nevertheless the above is not deemed to be assumed as fully exhaustive inasmuch as not every possible use has been envisaged.
2. All the illustrations and drawings provided are to be intended as indicative and therefore not binding, the illustrations being for presentation purposes only.
3. Being as the conditions of Product use and applications cannot be controlled by Bardiani Valvole S.p.A., the Purchaser must ascertain suitability of the use he intends to make of the products beforehand and assume all risks and liabilities which may result from the same.
4. Customer is strongly advised to consult Bardiani Valvole S.p.A.'s technical-commercial collaborators to request any specific information concerning the technical characteristics of the Products.
5. The information provided in this manual refers to the standard products manufactured by Bardiani Valvole S.p.A. and therefore cannot be assumed to apply to customized products as well.
6. Bardiani Valvole S.p.A. reserves the right to amend and/or integrate and/or update the data and/or information and/or technical details relative to products at any time and without prior notice. Please visit the website, www.bardiani.com, where the latest updated of the "Instruction, Use and Maintenance Manual" can be found".
7. The content and validity of the warranty covering Bardiani Valvole S.p.A products are dealt with in the relative section in the "Instruction, Use and Maintenance Manual" which constitutes an integral part of the products themselves.
8. The content and validity of the warranty covering the Products of Bardiani Valvole S.p.A are dealt with in the relevant section in the "Instruction, Use and Maintenance Manual" which constitutes an integral part of the Products themselves.

NOTES

Bardiani Valvole S.p.A.
via G. di Vittorio, 50/52 - 43045 Fornovo di Taro (PR) - Italy
tel. +39 0525 400044 - fax +39 0525 3408
bardiani@bardiani.com - www.bardiani.com