VERY IMPORTANT VALVE

COMPLETE RANGE

BARDIANI
VALVOLE

"Thanks to our passion, high level of specialization and the seriousness of our collaborators' work, we offer top quality valves accompanied by a flexible and reliable service with constant attention to our customers and their needs.
We make integrity and seriousness the cornerstones of our actions and relations."

Bardiani Valvole means **Quality, Passion, Reliability and Precision.**

A STRONG IDENTITY

The Company was established in 1981 by Emilio Bardiani – the father of Emanuela Bardiani, Managing Director, and Luca Bardiani, the company's Chairman and CEO – to make valves for some of the most important food manufacturing companies in the area. It is the quality of its solutions and services that has allowed Bardiani Valvole to reach customers operating in the same sector all over the World as well as to make quality valves for other sectors.

The commitment in such delicate sectors has allowed Bardiani to develop a deep understanding of the respect needed for product integrity. A commitment which can be seen in the production of valves for the specific nature of the various spheres of use and applications.

INDUSTRIAL PARTNERS

Bardiani Valvole Spa can count on business partners to supply pumps and heat exchangers.

Unique features for quality products

- **Raw materials high quality** All parts in contact with the product are made in **AISI 316L** stainless steel.
- **Excellent hygiene** <**0.8 µm** Surface finish on parts in contact with the product.
- **Greater resistance** Single cast valve body with no welds.
- **Maximum efficiency** Optimization of passages and minimization of friction loss.
- **Certified safety** ATEX version, available for use in potentially explosive atmospheres.
- **Easy installation** Designed to facilitate installation and maintenance operations without use of any special tool.
- **Efficient monitoring Giotto Top®** and **J-Giotto Top®** allow to constantly monitor valves status.
- **Space-saving solutions** to improve efficiency and save space
- **Fully tested** All valves are supplied pre-assembled and tested
- **Customized products** As well as standard models, Bardiani Valvole offers the possibility to make **special valves**.

QUALITY, INDUSTRIAL EFFICIENCY, PRODUCT RELIABILITY

The combination of technology, product customization and attention to details makes Bardiani Valvole an extraordinary supplier in its flexibility and ability to meet customer requests.

The standards achieved through experience and a process of continual improvement make it possible to reach maximum reliability. What is more, continual improvement allows Bardiani Valvole to take decisive steps forward also in offering increasingly competitive solutions.

Valves designed for every kind of application

Certifications: Quality, reliability and safety

The quest for quality has always been the main focus at Bardiani. This is why Bardiani valves have obtained important and significant certifications which objectively certify the quality, performance and safety of its products.

Certificated sealing solutions

In order to manufacture reliable and high quality products, Bardiani Valvole select only European partners able to supply certified, reliable and long-lasting seals.
These are sealing solutions provided:

EPDM is a polymer composed of ethylene, propylene and a small percentage of a diene and is particularly well-suited for applications involving polar media. It has an outstanding resistance to water and aqueous systems.

FKM is an fluorinated material with a monomer composition, thanks to its good swelling resistance towards aliphatic and aromatic hydrocarbons, oils and greases.

VMQ (Silicone) has very good mechanical resistance values and a low compression set. It is also resistant to many different media and has good properties also at low temperatures.

HNBR is distinguished by its resistance to greases, waxes and oils and for this reason, it is used in systems in which these media are contained or controlled.

PTFE can be used in an extremely wide range of temperatures. It has high heat expansion and is hard but barely elastic. PTFE has a very low coefficient of friction with regard to most counterfacing materials.

For special request, Bardiani Valvole evaluates with the customers additional solutions.

TOTAL ASSISTANCE

Flexibility and listening to clients for made-to-measure services

Only by constantly listening to and comparing notes with our customers Bardiani creates those evolutions which make the real difference in industrial processes.

Preventive maintenance

- Customer-specific production schedules
- Life cycle analysis and in-person valve maintenance
- Maintenance costs monitoring

Guaranteeing parts availability

- Original spare parts
- Prompt deliveries
- Avalability over time

Technical trainings

- Hands-on trainings
- On site or at customer plants

Efficient order management

- Quick feedbacks
- Fast deliveries
- Continuous monitoring

Continual technical support

- Dedicated and made by experienced technicians
- Quick claims resolution

Customized valves and clusters based on customer drawing

- Orbital welded, passivated and tested
- Great quality and fast delivery

Customized solutions

From the collaboration between the customer and Bardiani Valvole technicians, valve clusters take shape. Bardiani clusters are made according to the **customer's specific design**, orbital welded, passivated and tested.
Thanks to the excellent product quality and the maximum responsiveness to the customer's needs, the valve clusters are one of the **strong points** of the Bardiani Valvole production range.

VALVES RANGE

DOUBLE SEAT VALVES

10-13

B925

Double seat valve

10-13

B935

Double seat tank-bottom valve

14-15

B915PMO

Double seat valve
PMO certified

16-19

BZAW3

Double seal valve

SINGLE SEAT VALVES

20-21

BBZP

Single seat valve

22-23

BBWP

Aseptic valve with membrane

24-25

BBZS1

By-pass valve

24-25

BBZS5

Pneumatic by-pass valve

BUTTERFLY VALVES

26-27

ZVF

Pneumatic butterfly valve

26-27

VVF

Manual butterfly valve

BALL VALVES

34-35

ZVS

Pneumatic ball valve

34-35

VVS

Manual ball valve

HIGH PRESSURE VALVES

28-29

BBZQ

High pressure valve

MODULATING VALVES

30-31

BBZK

Modulating valve with membrane actuator

32-33

BBZPM

Modulating valve with electropneumatic positioner and piston actuator

CONTROL UNITS

36-37

GIOTTO TOP®
J-GIOTTO TOP®

Control units

38

GIOTTO TOP ATEX
J-GIOTTO TOP ATEX

ATEX Control units

ACCESSORIES

39

BBTRD

Sight glass

COMPARATIVE TABLE

40-41

Product technical details and variants

B925
B935

DOUBLE SEAT VALVES

B925 e **B935** (tank-bottom version) are double seat valves (mix-proof) with an extremely modern and compact design. These valves direct and control the flow of two different liquids simultaneously, guaranteeing total separation between the two, to avoid any risk of contamination. Extremely effective in production plants these valves allow a reduction in the number of single seat valves required and consequently optimize the use of available installation space.

B925

B935

Standard features

1. Connections from DN15 to DN150 (from 3/4" to 6")
2. Seals: EPDM, FKM, HNBR
3. Maximum pressure: 10 bar

Main benefits

- **Complete separation** between two different products
- **Maximum versatility** for different applications and products
- **Maximum hygiene** (EHEDG, 3A certified)
- **Easy maintenance** without use of special tools
- **Sturdiness**: valve bodies made from solid bar
- Balanced valve shutters made from **solid bar**
- Auxiliary external cleaning circuit (optional)
- Upper and lower lift
- **Serviceable actuator**

Versions

B925V Aseptic double seat valve (with steam barrier)

B925B Doubel seat valve with auxiliary external cleaning circuit

B925A Aseptic double seat valve with auxiliary external cleaning circuit

Special valves

- Mixproof valves for high pressure applications (>10 bar)
- Valves for special applications (back-to-back, pigging, long stroke)
- Special DN body sizes

CERTIFICATIONS

MIXPROOF VALVES:
Unique features for unique and reliable valves

HIGH VERSATILE VALVE FOR DIFFERENT APPLICATIONS AND PRODUCTS

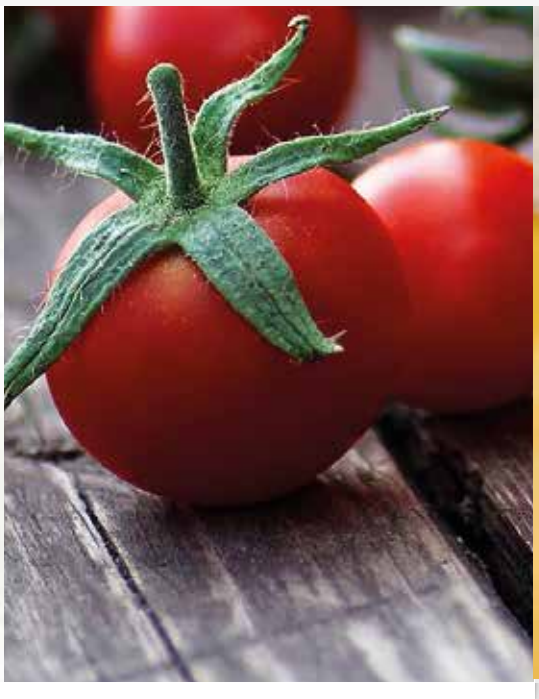

HYGIENIC DESIGN, EHEDG CERTIFIED
Reduction of number of seals in contact with the product to guarantee high hygiene and efficient maintenance.

FLEXIBILITY
On request, all accessories are available for different sizes and body configurations, as well as special ports, diameters and other tailor-made solutions.

BALANCED SHUTTERS
High resistance against water hammer

AUXILIARY PROXIMITY (OPTIONAL)
The auxiliary proximity is fitted between the valve body and the actuator and guarantees the complete check of the upper shutter during the cleaning operation or in case there is a water hammer in the plant that could open the upper shutter.

B925 VALVE OPERATION

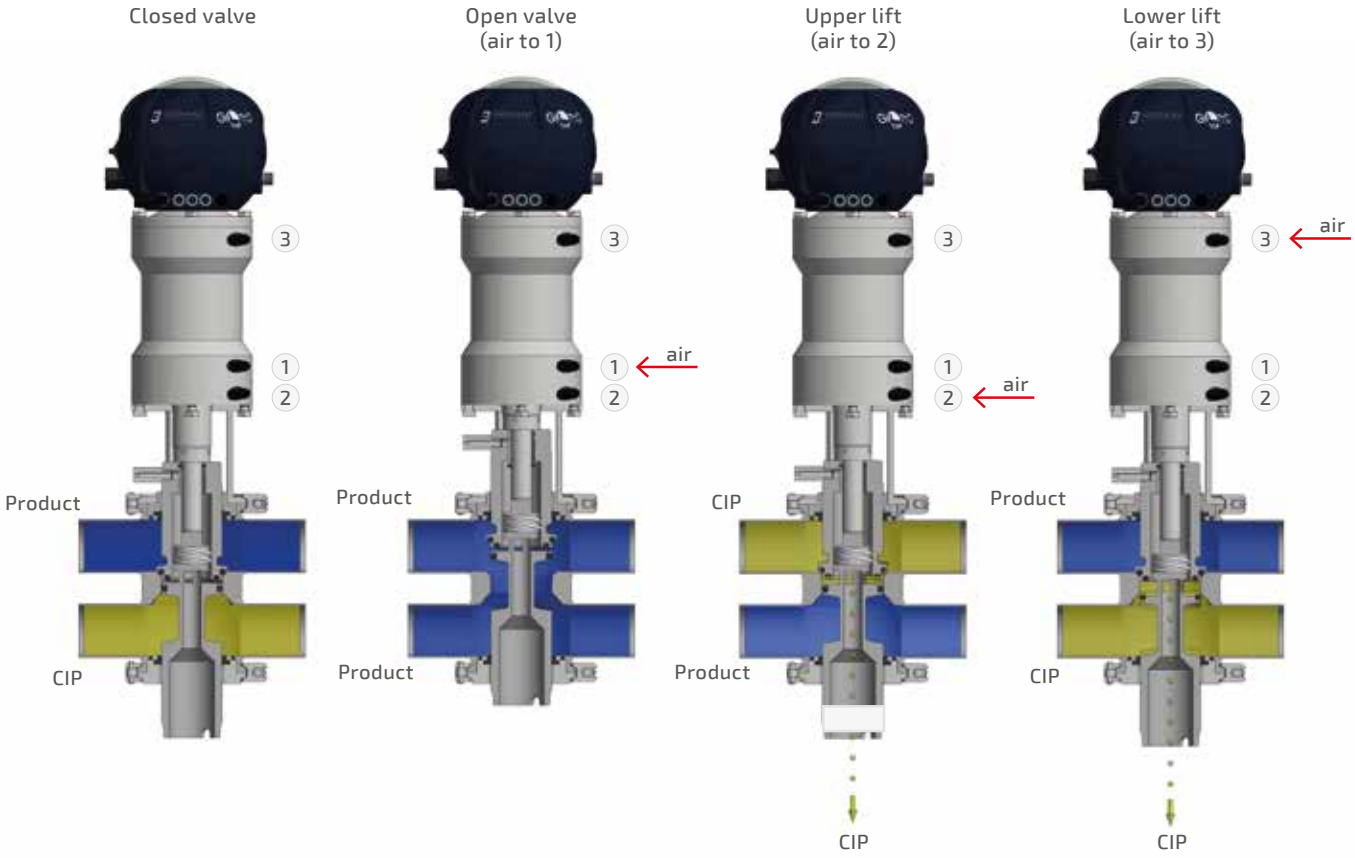

B935 VALVE OPERATION

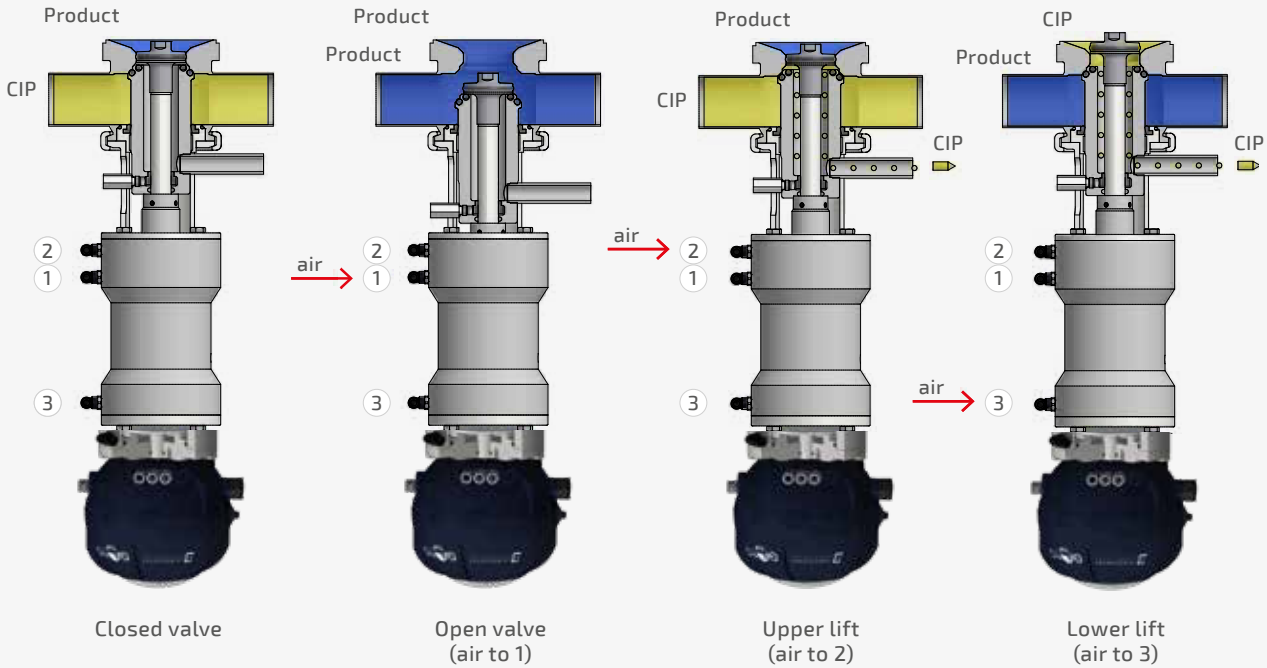

B915PMO

DOUBLE SEAT VALVE
PMO CERTIFIED

B915PMO has a modern, compact design; engineered to guarantee an easy maintenance. As mixproof valve, **B915PMO** directs and controls the flow of Milk (or dairy products) and cleaning solution simultaneously, guaranteeing the total separation between the two liquids. Furthermore, to meet PMO (Pasteurized Milk Ordinance) requirements it has been designed to ensure that a vacuum always exist in the leakage chamber, during the chamber cleaning; and to guarantee no CIP impingement on the opposite seat during seat lift cleaning. To ensure maximum safety lower and upper seats indicators are managed
by an external sensor and by Giotto Top control unit.

Standard features

1. Connections from DN38.1 to DN 101.6
2. Seals: EPDM, FKM, HNBR
3. Maximum pressure: 10 bar

Main benefits

- **Complete separation** between two different products
- **Maximum versatility** for different applications and products
- **Maximum hygiene** (EHEDG, 3A certified)
- **Easy maintenance** without use of special tools
- **Sturdiness**: valve bodies made from solid bar
- Upper and lower lift
- **Serviceable actuator**

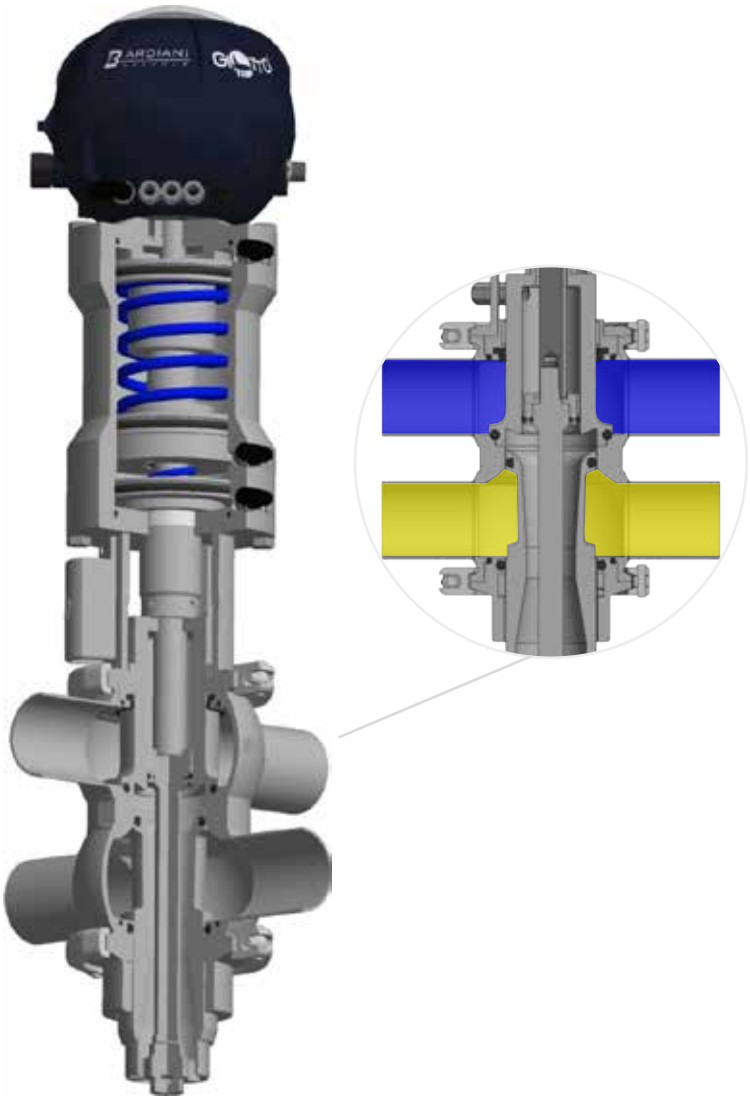

CERTIFICATIONS

Pasteurized Milk Ordinance

3-A 85-03

B915PMO mixproof valve meets 3A/PMO requirements

PMO regulations has the aim to promote the sanitary processing of milk for manufacturing purposes, and to assure wholesome, stable, and high-quality dairy products.
In order to save time and increase production without interruption of production line for cleaning operations, Bardiani Valvole has designed its PMO mixproof valve **B915PMO** which allow total and safe separation between dairy products and CIP solution with no possibility of contamination during seat cleaning procedures.

BZAW3

DOUBLE SEAL VALVE

BZAW3 is a double seal valve designed to guarantee separation between two fluids. The special design of the shutter provide a separation chamber between the two seals. This ensures that any product leaks flow out through the two auxiliary valves located on the separation chamber, avoiding any contact between the two fluids.

Standard features

1. Connections from DN25 to DN150 (from 1" to 4")
2. Seals: EPDM, FKM, HNBR
3. Maximum pressure: 10 bar

Main benefits

- **Complete separation.** Created to guarantee separation between two different products
- **Maximum versatility** for different applications and products
- **Easy maintenance** without use of special tools
- **Sturdiness:** valve bodies made from solid bar

CERTIFICATIONS

Variants

- **BYAW3** Steam barrier

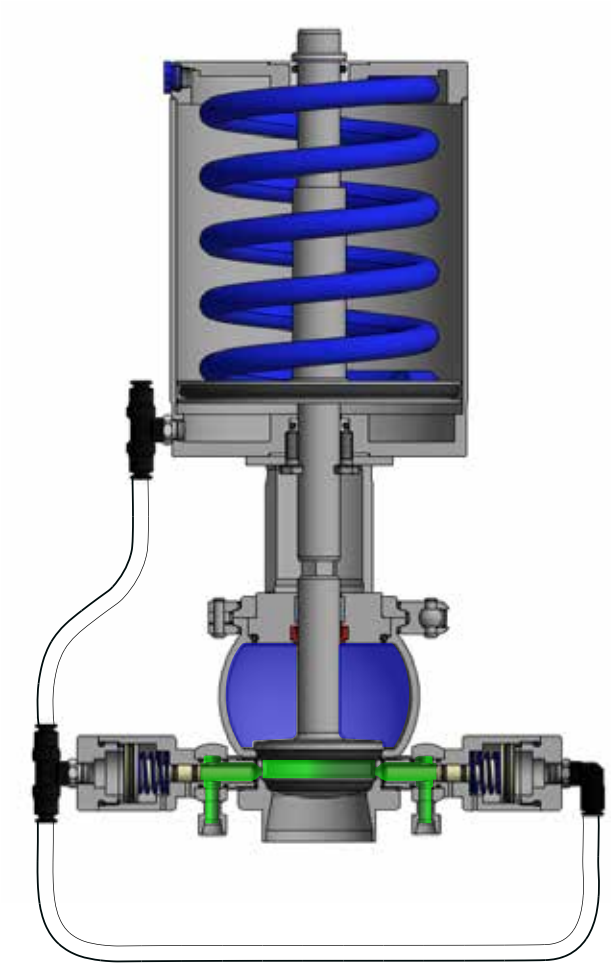

SIMPLE OPERATION MODE

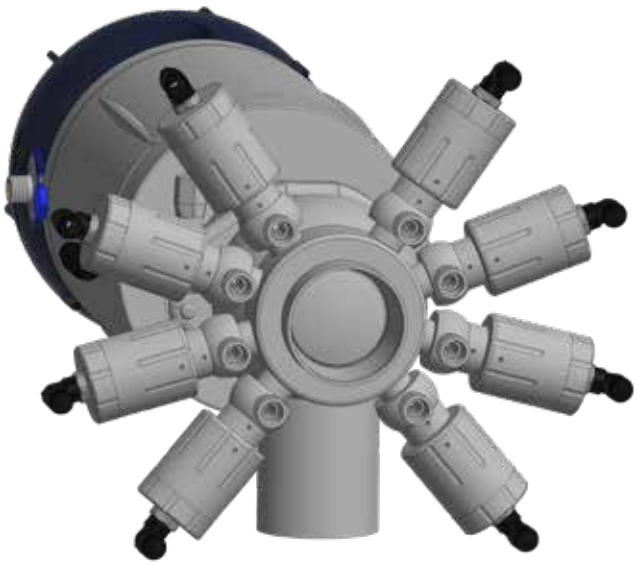

POSITIONING OF AUXILIARY VALVES ON REQUEST

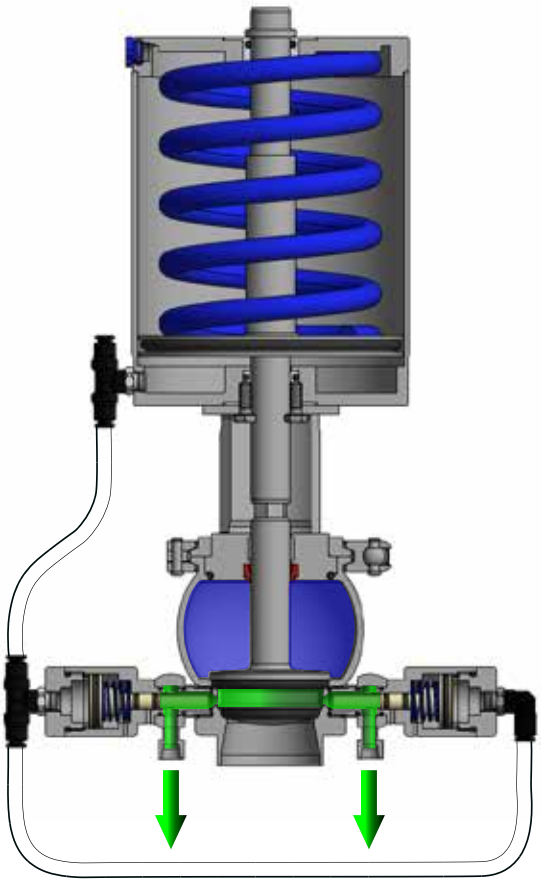

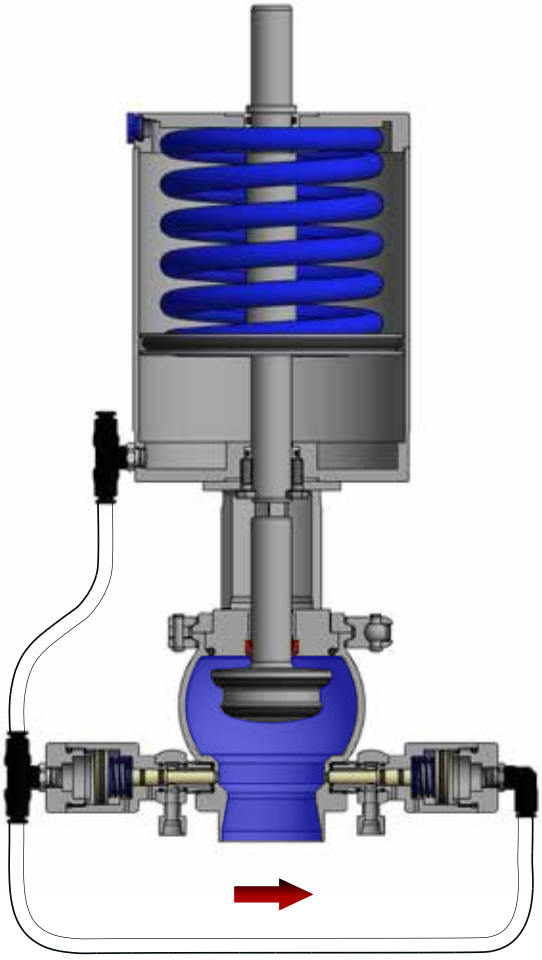

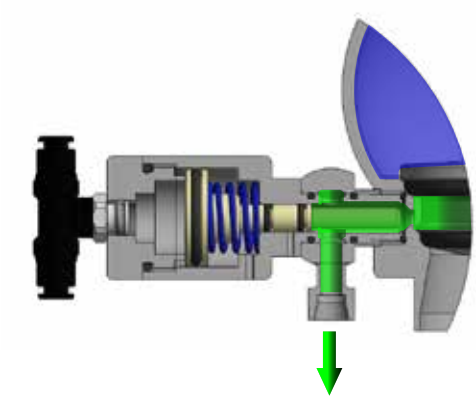

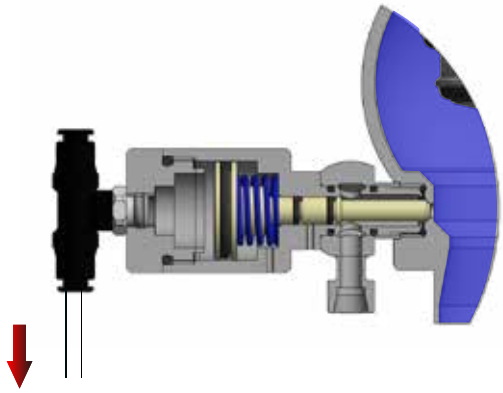

Closed valve

The double seal shutter ensures perfect separation between the product lines, creating a chamber among them. In the closed position, sterilisation or cleaning is allowed between the seals, by the two auxiliary valves. When normally open the two auxiliary valves avoid mixing of products and ensure a leakage detection too.

Open valve

In the opening phase of the double seat shutter, the two auxiliary valves close automatically, avoiding any product contamination.

BBZP

SINGLE SEAT VALVE

BBZP is a single seat valve made from top quality raw materials. Thanks to its versatility, sturdiness and reduced number of seals in contact with the product, it can be installed in all applications requiring maximum reliability in cutting off and directing a fluid.

Standard features

1. Connections from DN10 to DN150 (from 1/2" to 6")
2. Seals: EPDM, FKM, HNBR, PTFE
3. Maximum pressure: 10 bar

Main benefits

- **Maximum hygiene and reliability** (EHEDG and 3A certified)
- **Reduced number** of seals in contact with the product
- Bodies made from **solid bar**
- **Easy maintenance** without use of special tools
- **Maximum versatility** thanks to the various configurations available

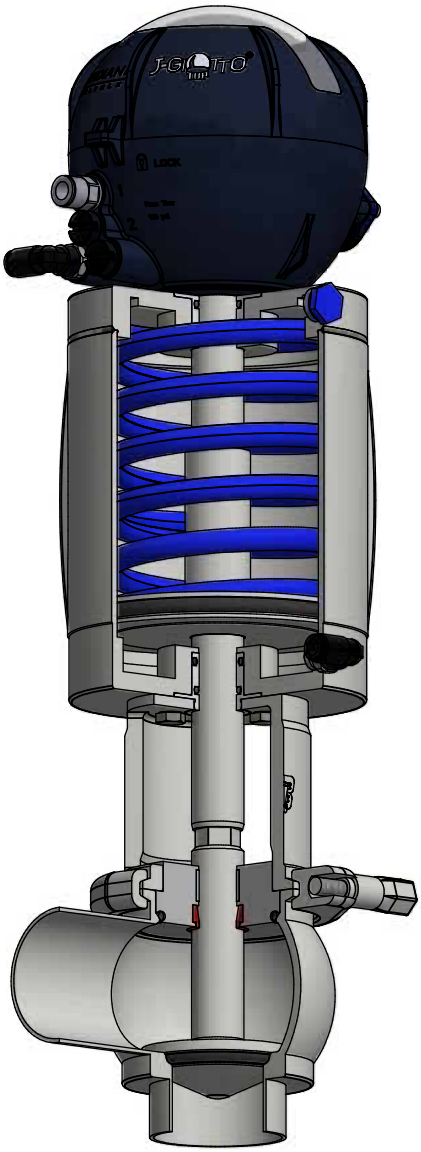

CERTIFICATIONS

Variants

- Stroke limiter
- Oversized actuator
- Parabolic shutter
- Pressure regulator

Versions

- **BBZM** Manual single seat valve
- **BBZR** Long stroke single seat valve
- **BBYP** Aseptic single seat valve (with steam barrier)
- **BBZT** Single seat valve with Twin stop
- **BBZO/BBZOG** Tank-bottom single seat valve

BBWP

ASEPTIC VALVE WITH MEMBRANE

A
ASEPTIC

The **BBWP** valve has been designed for sterile applications which require safety in cutting off and/or directing of product. The TFM gasket guarantees complete isolation of the shutter from the external environment. Recommended for processing applications involving viscous or sticky products.

Standard features

1. Connections from DN25 to DN100 (from 1" to 4")
2. Seals: EPDM, FKM, HNBR, PTFE
3. Maximum pressure: 8 bar

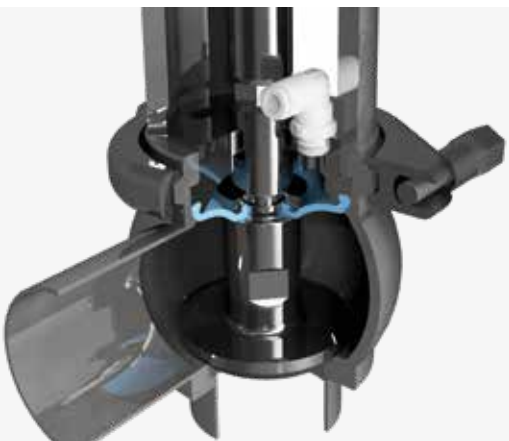

Main benefits

- **100% aseptic**: ideal for sterile applications
- **Maximum hygiene** and reliability
- **Sturdiness:** valve bodies made from solid bar
- **Easy maintenance** without use of special tools
- **Flexibility:** The BBWP is interchangeable with the BBZP single seat valve
- **Maximum versatility** thanks to the various configurations available

Variants

- Parabolic shutter

Versions

- **BBWM**
  Manual aseptic valve with membrane

BBZS1
BBZS5

BY-PASS VALVES

BBZS1 and **BBZS5** by-pass valves have been designed to be highly versatile. These valves are suitable for different types of application and for diverse industrial sectors.
Regulation of the retained pressure depends on the loading of the spring. This load can be regulated by adjusting ring nut located inside the protective casing on **BBZS1**. Or by using the adjustment pin on the top back of the actuator on **BBZS5** with the possibility to facilitate valve washing by opening the actuator with air injection.

BBZS1

BBZS5

Standard features

1. Connections from DN10 to DN100 (from 1/2" to 4")
2. Seals: EPDM, FKM, HNBR, PTFE
3. Maximum pressure: 10 bar

Main benefits

- **Maximum hygiene and reliability** (EHEDG and 3A certified)
- **Sturdiness:** valve bodies made from solid bar
- **Easy maintenance** without the need for special tools
- **Maximum versatility:** suitable for different applications and products
- **Maximum safety**

CERTIFICATIONS

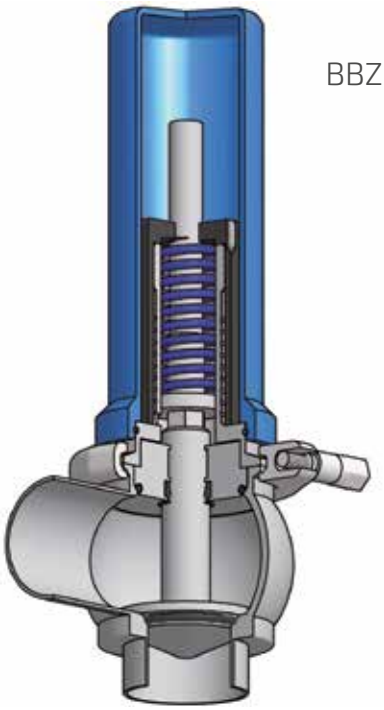

BBZS1

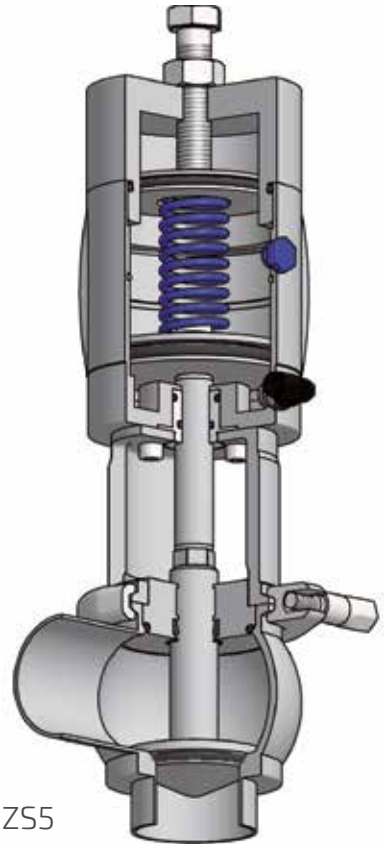

BBZS5

Versions

- **BBYS1** - By-pass with steam barrier
- **BBYS5** - Pneumatic by-pass valve with steam barrier

STEAM BARRIER

A steam barrier is recommended for very hygiene applications such as sterile, aseptic processing or high temperature sterilization. The steam barrier, placed between the valve body and the pneumatic actuator, allows a safe separation between product inside the valve and external environment.

ZVF
VVF

BUTTERFLY VALVES

ZVF is a butterfly valve with pneumatic actuator which cuts off and monitors fluids in the process flow by movements of opening and closing. Characterized by a simple design and engineered to be extremely reliable, it is commonly used in many different applications requiring extensive product passage.

VVF is a manual butterfly valve which cuts off and monitors fluids in the process flow by movements of opening and closing. Available in versions with a plastic 5-position handle, stainless steel 4-position handle or with a millimetric regulation handle for precision measuring of fluid passage.

ZVF

VVF

Standard features

1. Connections from DN10 a DN150 (da 1/2" a 6")
2. Seals: EPDM, FKM, HNBR, VMQ
3. Maximum pressure: 10 bar

Main benefits

- **Certified hygienic design**
- **Maximum reliability**
- Wide range of **customized solutions**
- **Simplified maintenance** of pipeline thanks to special fittings available

CERTIFICATIONS

WAFER 4 FITTING

Available in both ZVF and VVF version, it is commonly used in many different applications requiring large product passage. The particular type of connection fittings allow to pull off easily the valve body from the piping only removing 2 screws during maintenance operations.

VVF variants

- Plastic handle
- Stainless steel handle
- Stainless steel handle with millimetric regulation

Variants

- **SENSORS** (only for VVF valve) One or two Proximity switches can be installed close to the lever; a feedback is given to an electrical board.
- **STROKE LIMITER** (only for ZVF valve) Adjustable device which allows mechanical regulation of valve stroke.

BBZQ

HIGH PRESSURE VALVE

BBZQ is the **only high pressure valve** currently available on the market which guarantees 3A certified hygiene. This single seat valve has been designed for application in all health-hygiene sectors with **pressures up to 150 bar**. Made from top quality raw materials, it is characterized by an extremely modern design and sturdiness and can be installed in all those applications where maximum reliability is required for cutting off and directing a fluid or product. Extremely versatile and flexible, with no increases in dimensions, it can be easily converted to an aseptic valve by inserting a steam barrier (model **BBYQ**). The connection fittings are totally interchangeable with the previous version (ZQ series).

Standard features

1. Connections from DN25 to DN100 (from 1" to 4")
2. Seals: EPDM, FKM, HNBR; PTFE and metal seal for the shaft
3. Maximum pressure: 150 bar from DN 25 to DN 80; 55 bar for DN 100

Main benefits

- **IT'S UNIQUE!**
  the only high-pressure valve – up to 150 bar – with 3A certification
- **Simplified maintenance** for significant time savings and increased efficiency
- **Modular and flexible:** conversion to aseptic with steam barrier (BBYQ) with no changes in dimensions
- **Sturdiness:** valve bodies made from solid bar
- **Serviceable actuator**

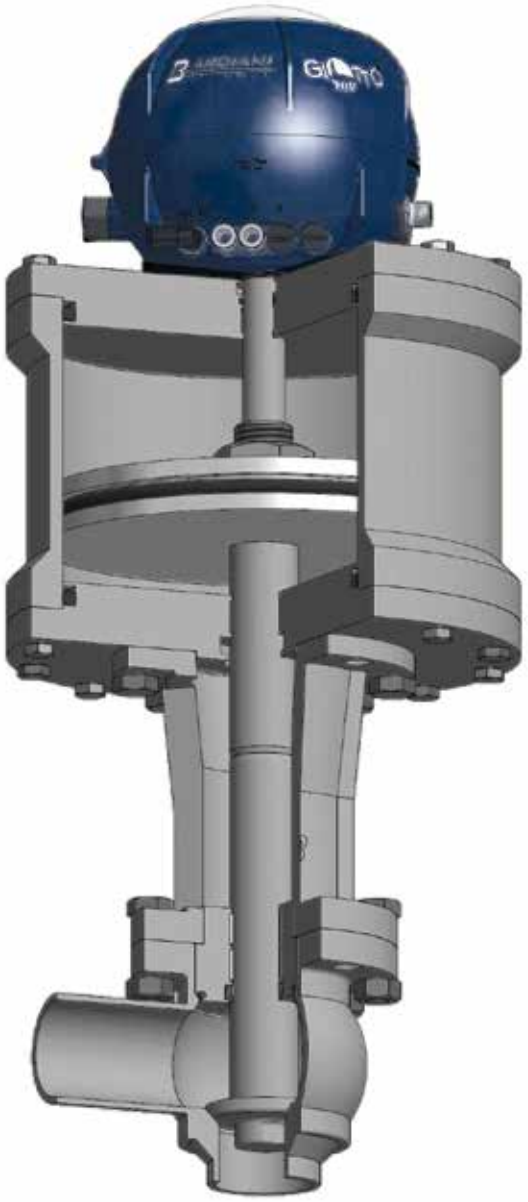

CERTIFICATIONS

Variants

- Hydraulic damper
- Parabolic shutter
- Stroke limiter
- Pressure regulator

Versions

- **BBYQ** Aseptic high pressur valve with steam barrier

BBZK

MODULATING VALVE WITH MEMBRANE ACTUATOR

BBZK is a modulating valve designed to regulate the flow rate and maintain a constant level, pressure or temperature value. Its membrane actuator connected to the positioner allows partial opening and closing of the shutter, allowing intermediate flow rates and pressure drop in the valve.

Standard features

1. Connections from DN25 to DN100 (from 1" to 4")
2. Seals: EPDM, FKM, HNBR, PTFE
3. Maximum pressure: 10 bar

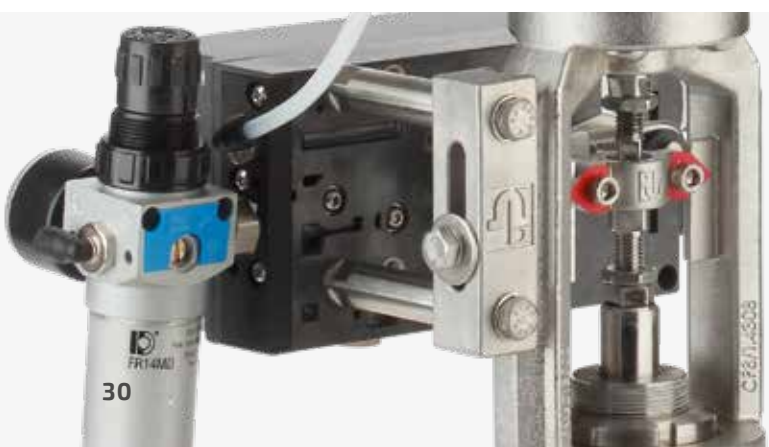

Main benefits

- **Maximum regulation reliability**
- **Flexibility** thanks to the numerous options and variations available
- Optimization of **process efficiency**
- **Serviceable actuator**

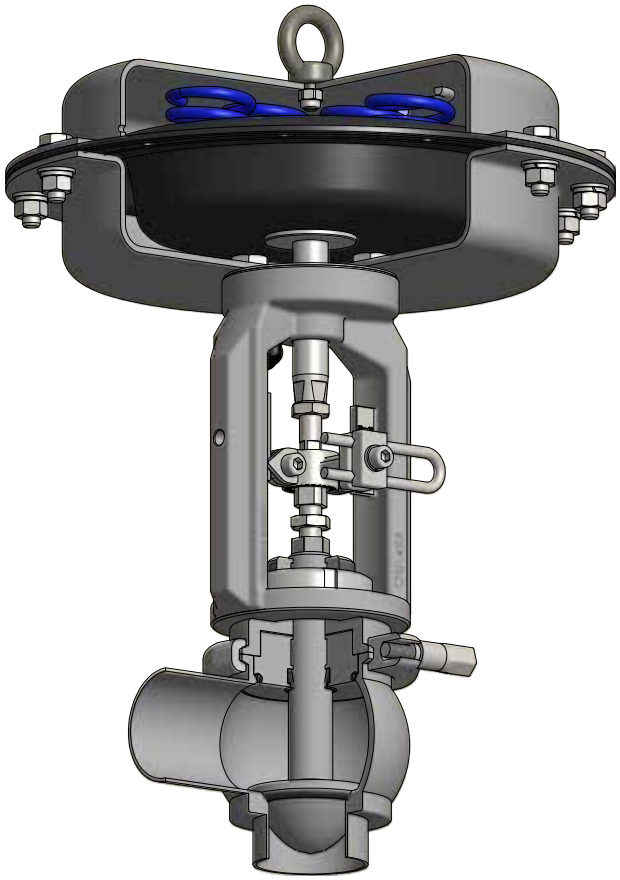

CERTIFICATIONS

Variants

- Electropneumatic positioner
- Linear shutter
- Equipercentage shutter

Versions

- **BBYK** Aseptic modulating valve with membrane actuator and steam barrier

BBZPM

MODULATING VALVE WITH ELECTROPNEUMATIC POSITIONER

BBZPM is a modulating valve characterized by a compact design and engineered to regulate the flow rate and maintain a constant level, pressure or temperature value. The connection of the positioner to the actuator allows partial opening and closing of the shutter, allowing intermediate flow rates and consequently pressure drop in the valve.

GE type

BRK type

Standard features

1. Connections from DN25 to DN100 (from 1" to 4")
2. Seals: EPDM, FKM, HNBR, PTFE
3. Maximum pressure: 10 bar

Main benefits

- **Maximum regulation reliability**
- Optimization of **process efficiency**
- **Compact design**
- **Easy maintenance** without need for special tools
- **Sturdiness:** valve bodies made from solid bar

GE type

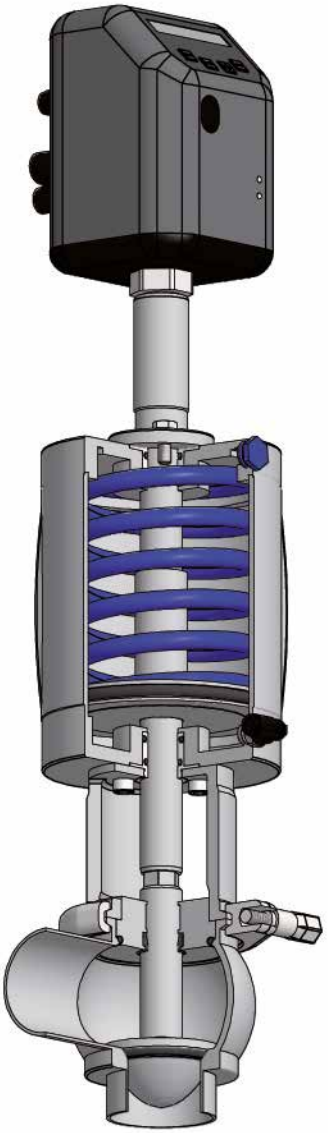

BRK type

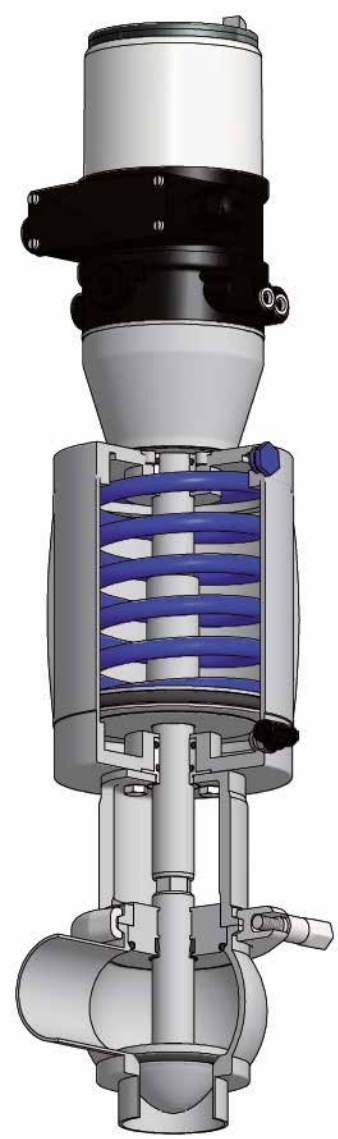

CERTIFICATIONS

3A 53-06

Variants

- Equipercentage shutter
- Linear shutter

Versions

- **BBYPM** Modulating valve with electropneumatic positioner, piston actuator and steam barrier

ZVS
VVS

BALL VALVES

ZVS is a pneumatic sanitary ball valve which allow product passage without restrictions, reducing friction loss to a minimum.
It is ideal for viscous liquids or liquids with suspended particles in food, beverage and pharmaceutical industries and in applications with high operating pressures.
On request the integral seal version it's available, to reduce product stagnation inside the valve body to a minimum.

The manual version **VVS** is fitted with a stainless steel 2-position handle; handle with multiple positions is available on request.

ZVS

Standard features

1. Connections from DN10 to DN100 (from 1/2" to 4")
2. Seals: FKM, PTFE
3. Maximum pressure for two-way valves: 25 – 64 bar (depending on diam.); for three way valves: 16-40 bar (depending on diam.)

VVS

Main benefits

- **Product passage without restrictions guaranteed**
- **High-precision**
- Maximum **versatility**

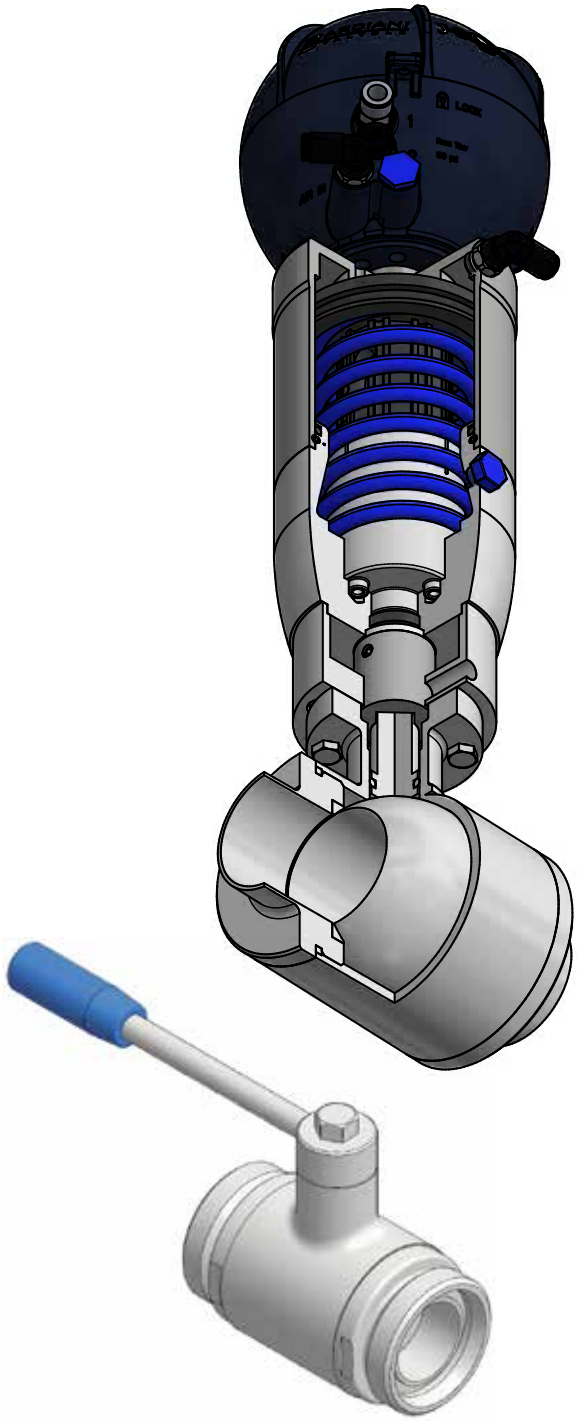

CERTIFICATIONS

Variants

- Stroke limiter (only for ZVS)

GIOTTO TOP®
J-GIOTTO TOP®

CONTROL UNITS

The **Giotto Top® 360** control unit has been designed to ensure effective control and monitoring of valve operation. Each control unit can manage all the operations linked to valve functioning: in fact, both the position indicators (proximity switches and microswitches) and the solenoid valves are installed inside the Giotto Top® 360. Installation on the top of the valve actuator is quick and easy.
Made from high-resistance materials, the reliability of the electrical components which make up the unit ensures the operator can safely monitor operation, also controllable in remote mode, thanks to the illuminated indicators visible on all sides (360°). The high protection rating (IP67) against dust and liquid penetration ensures perfect operation of the various components even in the most arduous operating conditions.

Giotto Top is designed to manage double seat valves and large valves.
J-Giotto Top is designed to control single seat valve, butterfly valves and ball valves.

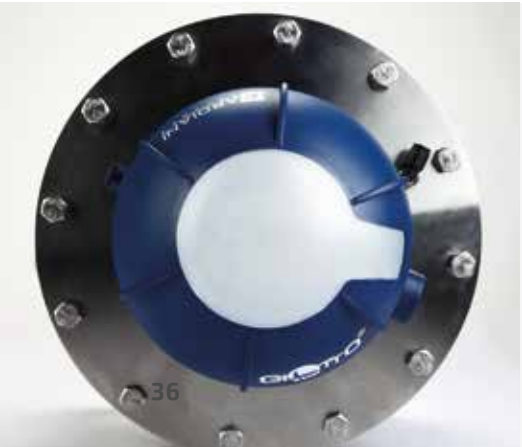

Main benefits

- **Effective and reliable** valve monitoring
- **Quality of materials** and observance of the **highest safety standards**
- **AS-i technology** which significantly improves system efficiency (Giotto Top only)
- **Easy installation** on the valve

Variants

- Lockable

AS-i NETWORK CARD (WITH GIOTTO TOP® ONLY)

An AS-interface slave card can be installed in Giotto Top control unit.
Giotto Top® with AS-interface technology is the most efficent solution for remote control of valves.

- Control units are in parallel connection to a 2 wires unshielded cable. It allows to collect information from the network and supply the power to sensors and solenoid valves installed.
- Using the existing wiring it's possible to add new elements to the network.
- AS-i master controls regularly all the slaves connected to the network.
- A maximum of 62 slaves can be connected to each AS-i master.
- The longest distance (total cable length) from the master must be max 100 m. The extension up to 200m requires passive bus termination. Repeters are used to reach longer distances.

Bardiani AS-i card can manage 4 inductive sensors and control 3 solenoid valves.

AS-i card LEDs provide light signaling of the valve position related to each sensor installed.
The light signal is all around visible.

ATEX LINE

CONTROL UNITS

Giotto Top® ATEX control units have been designed and manufactured in observance of Directive 2014/34 UE governing “Equipment and protective systems intended for use in potentially explosive atmospheres“, to ensure effective remote control of the various movements of the Bardiani Valvole valves. Atex control units guarantee a high level of safety for all applications associated with the formation of potentially explosive atmospheres.

CERTIFICATIONS

BBTRD

SIGHT GLASS

Valve body with flat glass closure which allows the user to constantly and reliably inspect the product.

Standard features

1. Connections from DN25 a DN100 (da 1" a 4")
2. Seals: EPDM, FKM, HNBR, PTFE
3. Maximum pressure: 10 bar

CERTIFICATIONS

Main benefits

- **Accuracy** in product inspection
- **Greater safety and sturdiness** thanks to the flat glass
- **Maximum versatility**. Also operates with vacuum.

COMPARATIVE TABLE

ASEPTIC

	FEATURES							
	Manual	Tank-bottom	By-pass	Pneumatic opening	Modulating	High pressure	Steam barrier	With membrane
DOUBLE SEAT VALVES								
B925						>10bar on request		
B925V							●	
B925B								
B925A							●	
B935		●						
B915PMO								
Double seal valves								
BZAW3								
BYAW3							●	
SINGLE SEAT VALVES								
BBZP								
BBZT								
BBYP							●	
BBYT							●	
BBZR								
BBYR							●	
BBZO-BBZOG		●						
BBYO-BBYOG		●					●	
BBZMF-BBZMG	●	●						
BBZM	●							
BBZMR	●							
BBYM	●						●	
Aseptic single seat valves with membrane								
BBWP								●
BBWM	●							●
By-pass valves								
BBZS1			●					
BBYS1			●				●	
BBZS5			●	●				
BBYS5			●	●			●	
BBZP (applicaz. regolazione pneum.)			●	●				
BUTTERFLY VALVES								
ZVF								
VVF	●							
HIGH PRESSURE VALVES								
BBZQ						●		
BBYQ						●	●	
MODULATING VALVES								
BBZK					●			optional
BBYK					●		●	
BBZPM					●			optional
BBYPM					●		●	
BALL VALVES								
ZVS								
VVS	●							

VARIANTS									CERTIFICATIONS		
Auxiliary external cleaning	Twin stop	Stroke limiter	Oversized stroke	Oversized actuator	Parabolic shutter	Hydraulic damper	Pressure regulator	Mixed DN sizes	ATEX	3A	EHEDG
			on request					on request	B925EX	85-03	●
									B925VEX	85-03	●
●									B925BEX	85-03	●
●									B925AEX	85-03	●
									B935EX	85-03	●
										85-03	●
			●						BZAW3EX	53-06	●
			●						BYAW3EX	53-06	●
		optional		optional	optional	optional	optional	on request	BBZPEX	53-06	●
	●			optional						53-06	●
		optional		optional	optional		optional			53-06	●
	●			optional						53-06	●
			●	optional				●		53-06	●
			●	optional						53-06	●
				optional			optional		BBZOEX	53-06	●
				optional			optional		BBYEX	53-06	●
										53-06	●
					●				BBZMEX	53-06	●
			●		●			●	BBYMEX	53-06	●
					●						
					●						
					optional				BBZS1EX		●
					optional						●
					optional				BBZS5EX	53-06	●
					optional				BBYS5EX	53-06	●
					optional		optional			53-06	●
		optional							ZVFEX		●
									VVFEX		●
		optional	on request		optional	optional	optional	on request	BBZQEX	53-06	
		optional	on request		optional	optional	optional	on request	BBYQEX	53-06	
										53-06	
										53-06	
										53-06	
										53-06	
		optional							ZVSEX		
									VVFEX		

MAIN VARIANTS
TO IMPROVE VALVES PERFORMANCE*

1. Steam barrier
A steam barrier is recommended for very hygiene applications such as sterile, aseptic processing or high temperature sterilization. The steam barrier, placed between the valve body and the pneumatic actuator, minimises the risk of the product coming into contact with the external atmosphere.

1

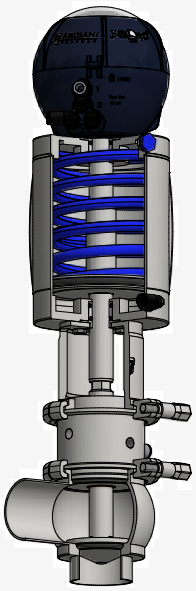

2. With membrane
The use of a TFM membrane, recommended for particularly viscous or sticky products tending to wear elastomers, allows the total isolation of components in contact with the product and the external environment.

2

3. External auxiliary circuit
Suitable for all applications where an external cleaning is needed. The auxiliary cleaning circuits allows the distribution of CIP fluid to clean the telescopic shutters and valve stern. This distribution takes place as turbolence, allowing complete removal of impurities from the shutters.

3

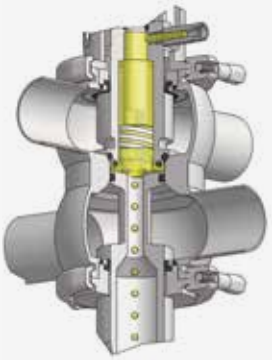

4. Twin-stop
An auxiliary Twin-Stop pneumatic cylinder controls the final closure or initial opening of a valve.
On aseptic valves, it is the ideal solution for avoiding water hammer caused by the rapid shutting of a valve. A valve with this configuration can be also used for flow regulation, weighing and dosing.

4

*for applications on valves please check detailled chart at page 40

5. Stroke limiter

Adjustable device which allows for the mechanical limitation of valve stroke.

5

6. Oversized actuator

The versatility of the single-seat valves allows the adaptation of various pneumatic cylinders according to the working pressure.

6

7. Parabolic shutter

The use of a shutter with parabolic profile allows a soften closure of the valve.

7

8. Hydraulic damper

This auxiliary device, dedicated only to high pressure valves, is mounted on the top of the pneumatic actuator.
Hydraulic damper allows slower opening and closing of the valve, increasing the service life of gaskets and avoiding creation of water hammers in pipeline.

8

9. Pressure regulator and manometer

The pressure regulator is a good solution for pneumatic by-pass valve. This device allows regulation of the air pressure into the pneumatic actuator, modifying the seal pressure. Fitted with the pressure regulator, the manometer shows the air supplying.

9

RECOMMENDATIONS

1

Consultation of the “Instruction, Use and Maintenance Manual” is mandatory prior to the installation, use and maintenance of the products of all Products. All the information, indications, specifications, technical details provided herein are based on test data which the Manufacturer Bardiani Valvole S.p.A. holds to be reliable nevertheless the above is not deemed to be assumed as fully exhaustive in as much as not every possible use has been envisaged.

2

All the illustrations and drawings provided are to be intended as indicative and therefore not binding, the illustrations being for presentation purposes only.

3

It is the Buyer’s duty to assess the suitability of the Products for the use he intends to make of the same prior to placing the order as he/she will take the risks and accept liability in case of incorrect choice and use of the Products.

4

The Manufacturer strongly recommends the Buyer to contact their sales team and request any information that might be needed in relation to the specifications and uses of the Products.

5

The information provided in this manual refers to the standard products manufactured by Bardiani Valvole S.p.A. and therefore cannot be assumed to apply to customized products as well.

6

Bardiani Valvole S.p.A. reserves the right to amend and/or integrate and/or update the data and/or information and/or technical details relative to Products at any time and without prior notice. Please visit the website www.bardiani.com, where the latest updated of the “Instruction, Use and Maintenance Manual” can be found”.

7

The content and validity of the warranty covering the Products of Bardiani Valvole S.p.A are dealt with in the relevant section in the “Instruction, Use and Maintenance Manual" which constitutes an integral part of the Products themselves.

8

Bardiani Valvole S.p.A., shall not in any way be held liable for immaterial, indirect and consequential damages, such as (by way of example only), damages or loss of business, contracts, opportunities, time, production, profits, goodwill, image etc..

BR_EN_09/2018

Bardiani Valvole Spa
via G. di Vittorio, 50/52 - 43045 Fornovo di Taro (PR) - Italy
ph. +39 0525 400044 - Fax +39 0525 3408 - bardiani@bardiani.com - service@bardiani.com - www.bardiani.com